Operating Instructions & Parts Manual

Long Chassis Hydraulic Service Jacks

Model	Capacity
22040C, 22041C	4 Ton
22050C, 22051C	5 Ton
22100C, 22101C	10 Ton

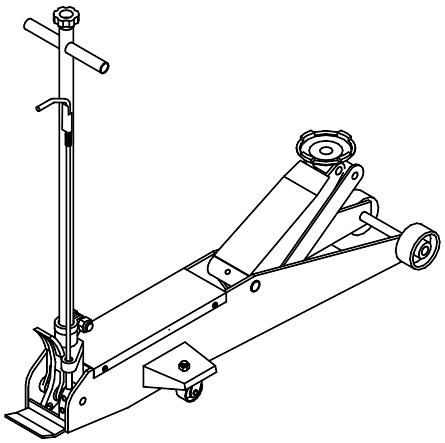

Models 22040C, 22050C & 22100C

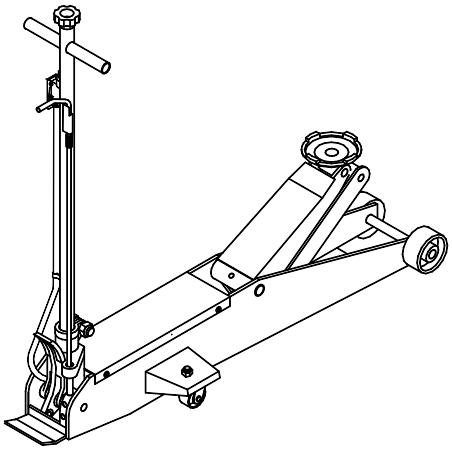

Models 22041C, 22051C & 22101C *(Air Options)*

U.S. Patent No's. 5,755,099 • 5,946,912 • 5,341,723

This is the safety alert symbol. It is used to alert you to potential personal injury hazards. Obey all safety messages that follow this symbol to avoid possible injury or death.

⚠ ADVERTENCIA

- Leer, comprender, y seguir las instrucciónes antes de utilizar el aparato.
- El manual de instrucciónes y la información de seguridad deben estar comunicado en lengua del operador antes del uso.
- No seguir estas indicaciónes puede causar daños personales o materiales.

⚠ WARNING

To avoid **crushing and related injuries**:

NEVER work on, under or around a load supported only by a hydraulic jack. **ALWAYS** use adequately rated jack stands.

SFA Companies
http://www.omegalift.com

Read this manual and follow all the Safety Rules and Operating Instructions before using this product.

Printed in China
22040C-M1 rev 06/08

ONE YEAR LIMITED WARRANTY

For a period of one (1) year from date of purchase, **SFA Companies** will repair or replace, at its option, without charge, any of its products which fails due to a defect in material or workmanship under normal usage. This limited warranty is a consumer's exclusive remedy.

Performance of any obligation under this warranty may be obtained by returning the warranted product, freight prepaid, to **SFA Companies** Warranty Service Department, 10939 N. Pomona Ave., Kansas City, MO 64153.

Except where such limitations and exclusions are specifically prohibited by applicable law, (1) THE CONSUMER'S SOLE AND EXCLUSIVE REMEDY SHALL BE THE REPAIR OR REPLACEMENT OF DEFECTIVE PRODUCTS AS DESCRIBED ABOVE. (2) **SFA Companies** SHALL NOT BE LIABLE FOR ANY CONSEQUENTIAL OR INCIDENTAL DAMAGE OR LOSS WHATSOEVER. (3) ANY IMPLIED WARRANTIES, INCLUDING WITHOUT LIMITATION THE IMPLIED WARRANTIES OF MERCHANTABILITY AND FITNESS FOR A PARTICULAR PURPOSE, SHALL BE LIMITED TO ONE YEAR, OTHERWISE THE REPAIR, REPLACEMENT OR REFUND AS PROVIDED UNDER THIS EXPRESS LIMITED WARRANTY IS THE EXCLUSIVE REMEDY OF THE CONSUMER, AND IS PROVIDED IN LIEU OF ALL OTHER WARRANTIES, EXPRESS OR IMPLIED. (4) ANY MODIFICATION, ALTERATION, ABUSE, UNAUTHORIZED SERVICE OR ORNAMENTAL DESIGN VOIDS THIS WARRANTY AND IS NOT COVERED BY THIS WARRANTY.

Some states do not allow limitations on how long an implied warranty lasts, so the above limitation may not apply to you. Some states do not allow the exclusion or limitation of incidental or consequential damages, so the above limitation or exclusion may not apply to you. This warranty gives you specific legal rights, and you may also have other rights which vary from state to state.

SAFETY and GENERAL INFORMATION

Save these instructions. For your safety, read, understand, and follow the information provided with and on this jack before using. The owner and operator of this equipment shall have an understanding of this jack and safe operating procedures before attempting to use. The owner and operator shall be aware that use and repair of this product may require special skills and knowledge. Instructions and safety information shall be conveyed in the operator's native language before use of this jack is authorized. If any doubt exists as to the safe and proper use of this jack, remove from service immediately.

Inspect before each use. Do not use if broken, bent, cracked or damaged parts are noted. Any jack that appears damaged in any way, or operates abnormally shall be removed from service immediately. If the jack has been or suspected to have been subjected to a shock load (a load dropped suddenly, unexpectedly upon it), immediately discontinue use until jack has been checked by a factory authorized service center (contact distributor or manufacturer for list of authorized service centers). It is recommended that an annual inspection be done by qualified personnel. Labels and Operator's Manuals are available from manufacturer.

PRODUCT DESCRIPTION

Omega Long Chassis Hydraulic Service Jacks are designed to lift, but not support, one end of a vehicle. Immediately after lifting, loads must be supported by a pair of appropriately rated jack stands. Air actuated function available for Models 22041C, 22051C & 22101C. Air actuated units require at least 7.8 CFM @ 110 - 175 PSI. A minimum of 150 PSI air pressure is required to raise rated capacity load.

***NEVER** use hydraulic jack as stand-alone device. After lifting, **immediately** support the lifted vehicle with a pair of appropriately rated jack stands.*

SPECIFICATIONS

Model	Capacity	Jack Size (L x W x H)	Min. Height	Max. Height	Hyd. Range	Saddle Dia.
22040C/ 22041C	4 Ton	50-5/8" x 15-3/8" x 7-1/2"	5"	24"	19"	5-1/2"
22050C/ 22051C	5 Ton	57-3/4" x 17" x 7-5/8"	7"	27"	20"	6-1/2"
22100C/ 22101C	10 Ton	54-3/4" x 20" x 12-3/4"	7"	27"	20"	7-3/8"

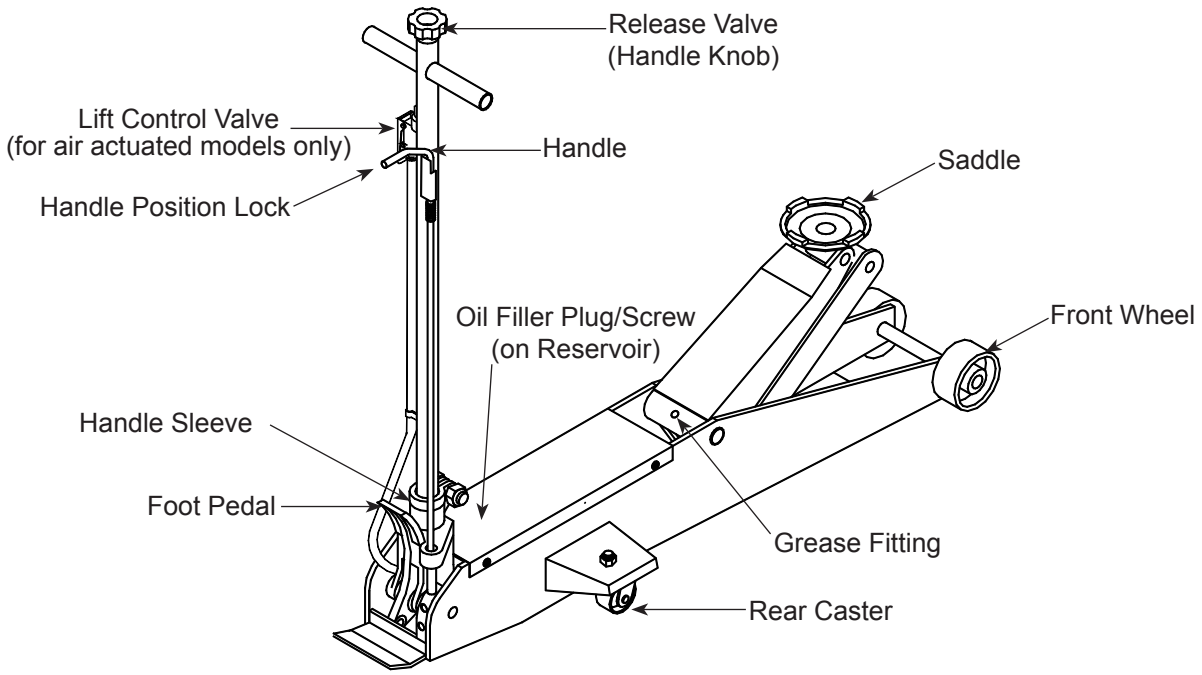

Figure 1 - Typical Long Chassis Jack Nomenclature (22051C shown)

PREPARATION

Assembly

Always secure the handle into the handle sleeve by means of the bolt lock washer and nut provided. Tighten securely to prevent accidental removal of handle while in use.

Before Use

1. Verify that the product and application are compatible, if in doubt call Omega Technical Service (888) 332-6419.
2. Before using this product, read the operator's manual completely and familiarize yourself thoroughly with the product, its components and recognize the hazards associated with its use.
3. To familiarize yourself with basic operation, turn the release valve (handle knob):
   a. Clockwise until firm resistance is felt to further turning. This is the '**CLOSED**' release valve position used to **raise** the saddle.
   b. Counter-clockwise, but no more than 1/2 turn from the closed position. This is the '**OPEN**' release valve position used to **lower** the saddle.
4. With saddle fully lowered, locate and remove cover plate, then remove the oil filler plug/screw. Pump 6 to 8 full strokes. This will help release any pressurized air which may be trapped within the reservoir. Check oil level. Proper oil level will vary from just covering the ram cylinder to 3/16" above it as seen from the oil filler hole. Reinstall the oil filler plug/screw.
5. For air option models 22041C, 22051C & 22101C, Pour a teaspoon of good quality, air tool lubricant into the air supply inlet of the lift control valve. Connect to air supply and operate for 3 seconds to evenly distribute lubricant.

   Note: These models are equipped with the popular 1/4" NPT air coupler. When installing a different air coupler of your choice, ensure that thread tape or compound is used when servicing connections. To ensure dependable, trouble free operation an inline air dryer and oiler is recommended.
6. Ensure that jack rolls freely. Raise and lower the unloaded saddle throughout the lifting range before putting into service to ensure the pump operates smoothly. Replace worn or damaged parts and assemblies with Omega authorized replacement parts only.

Bleeding / Venting Trapped Air

With the release valve in the OPEN position (3b.) and with saddle fully lowered, locate and remove the oil filler plug/screw. Pump 6 to 8 full strokes. This will help release any pressurized air which may be trapped within the reservoir. Reinstall the oil filler plug/screw.

⚠ WARNING

- **Study, understand, and follow** all printed materials provided with/on this product before use.
- **Do not** exceed rated capacity.
- Use only on hard, level surface.
- **This is a lifting device only!**
- **Immediately** after lifting, support the load with **a pair** of appropriately rated jack stands.
- Lift only on areas of the vehicle as specified by the vehicle manufacturer.
- Never wire, clamp or otherwise disable the lift control valve to function by other than operator's hand.
- Do not move or dolly the vehicle while on the jack.
- No alterations shall be made to this product.
- Failure to heed these markings may result in personal injury and/or property damage.

⚠ WARNING

To avoid **crushing and related injuries**:

- **Never** work on, under or around a load supported only by hydraulic jack.
- **Always** use adequately rated jack stands.
- Chock each unlifted tire in both directions.
- **Do not** use this device to lift, level, lower, support nor move a house, mobile home, travel trailer, camper or any building structure.
- **Be alert** and **sober** when using this product. Do not operate under the influence of drugs or alcohol.

OPERATION

Lifting

⚠ *Only attachments and/or adapters supplied by the manufacturer shall be used. Lift only on area of the vehicle as specified by the vehicle manufacturer.*

Note: The jack is equipped with handle position lock. To adjust the handle, release lock device by pulling the lever up, then back until lever is locked into place.

1. Follow the vehicle manufacturer's recommended guidelines for lifting. Engage the emergency brake and chock each unlifted wheel in both directions to prevent inadvertent vehicle movement.
2. Locate and close the release valve by turning the release valve knob clockwise until firm resistance is felt.
3. Refer to the vehicle manufacturer owner's manual to locate approved lifting points on the vehicle. Center jack saddle under lift point.
4. Verify lift point, then pump handle or foot pedal to contact lift point. To lift, pump handle or squeeze lift control valve (models 22041C, 22051C & 22101C) until load reaches desired height. **Never** use foot pedal to raise load.
5. Transfer the load **immediately** to appropriately rated jack stands.

⚠ ***NEVER*** *use hydraulic jack as a stand alone device!* ***ALWAYS*** *transfer the lifted load* ***IMMEDIATELY*** *to a pair of appropriately rated jack stands. Use one pair of jack stands per vehicle. Rated capacity is per pair only! Do not exceed rated capacity.*

Lowering

⚠ *Be sure all tools and personnel are clear before lowering load.* ***Slowly open the release valve!*** *The more you turn the release valve knob counter-clockwise, the faster the load will come down.* ***Maintain control*** *of the rate of speed at which the load lowers at all times!*

1. Raise load high enough to clear the jack stands.
2. Remove jack stands carefully. (**always** used in pairs).
3. **Slowly** turn the release valve knob counter-clockwise, but no more than 1/2 full turn. <u>If the load fails to lower</u>:
   a. Use another jack to raise the vehicle high enough to reinstall jack stands.
   b. Remove the malfunctioning jack and then the jack stands.
   c. Use the functioning jack to lower the vehicle.
4. After removing jack from under the vehicle, fully lower the saddle to reduce ram exposure to rust and contamination.

MAINTENANCE

Important: Use **ONLY** good grade hydraulic jack oil. Avoid mixing different types of fluid and **Never** use brake fluid, turbine oil, transmission fluid, motor oil or glycerin. Improper fluid can cause failure of the jack and the potential for sudden and immediate loss of load. We recommend Mobil DTE 13M.

Adding oil

1. With saddle fully lowered set jack in its upright, level position. Locate and remove oil filler plug/screw.
2. Fill with oil until ~3/16" above the inner cylinder as seen from the oil filler hole. Reinstall the oil filler plug/screw.

Changing oil

For best performance, replace the complete fluid supply at least once per year.

1. With saddle fully lowered, remove the oil filler plug/screw.
2. Lay the jack on its side and drain the fluid into a suitable container.

Note: Dispose of hydraulic fluid in accordance with local regulations.

3. Fill with oil until ~3/16" above the inner cylinder as seen from the oil filler hole. Reinstall the oil filler plug/screw.

Lubrication

A periodic coating of light lubricating oil to pivot points, axles and hinges will help to prevent rust and assure that wheels, casters and pump assemblies move freely. To help ensure trouble free operation, an inline air dryer and oiler is recommended.

Cleaning

Periodically check the pump piston and ram for signs of rust or corrosion. Clean as needed and wipe with an oily cloth.

Note: Never use sandpaper or abrasive material on these surfaces!

Storage

When not in use, store the jack with saddle fully lowered.

REPLACEMENT PARTS

(refer to page 6 thru12)

Not all components of the jack are replacement items, but are illustrated as a convenient reference of location and position in the assembly sequence. When ordering parts, give Model number, serial number and parts description. Call or write for current pricing: SFA Companies, 10939 N. Pomona Ave. Kansas City, MO 64153, U.S.A. Tel:(888)332-6419 Fax:(816)891-6599
E-Mail: sales@omegalift.com
Omega Website: http://www.omegalift.com

TROUBLESHOOTING

Symptom	Possible Causes	Corrective Action
Jack will not lift load	• Release valve not tightly closed • Overload condition • Air pressure inadequate	• Ensure release valve tightly closed • Remedy overload condition • Ensure adequate air pressure
Jack will lift, but not maintain pressure	• Release valve not tightly closed • Hydraulic unit malfunction	• Ensure release valve tightly closed • Discontinue use, contact Omega technical service
Jack will not lower after unloading	• Reservoir overfilled • Linkages binding • Fluid level low	• Drain fluid to proper level • Clean and lubricate moving parts • Ensure proper fluid level
Poor lift performance	• Fluid level low • Air trapped in system	• Ensure proper fluid level • With ram fully retracted, remove oil filler plug/screw to let pressurized air escape. Reinstall oil filler plug/screw
Will not lift to full extension	• Fluid level low	• Ensure proper fluid level

Replacement parts illustration for Model 22040C

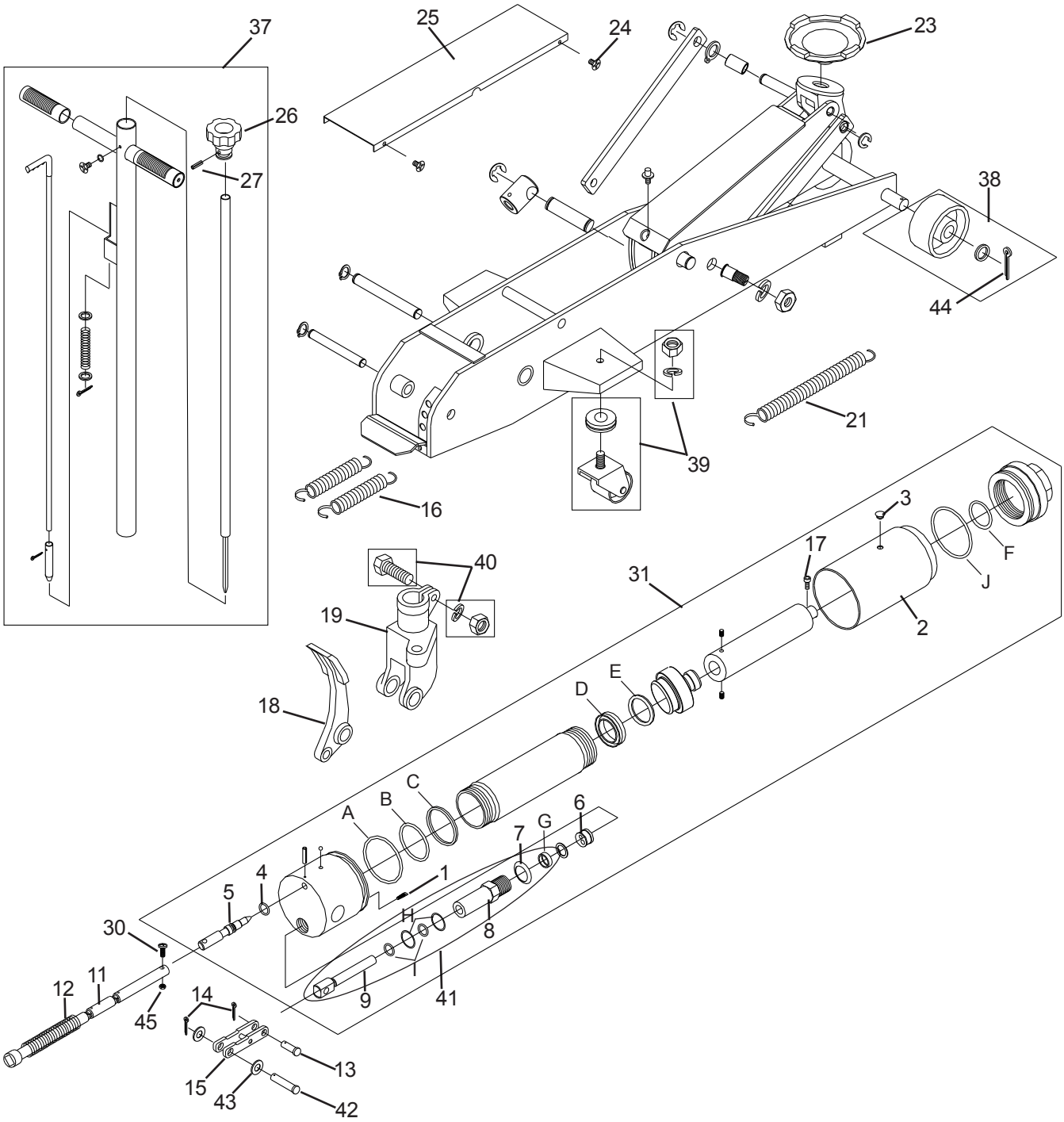

Figure 2 - Replacement Parts Illustration for Model 22040C

Replacement parts illustration for Model 22041C

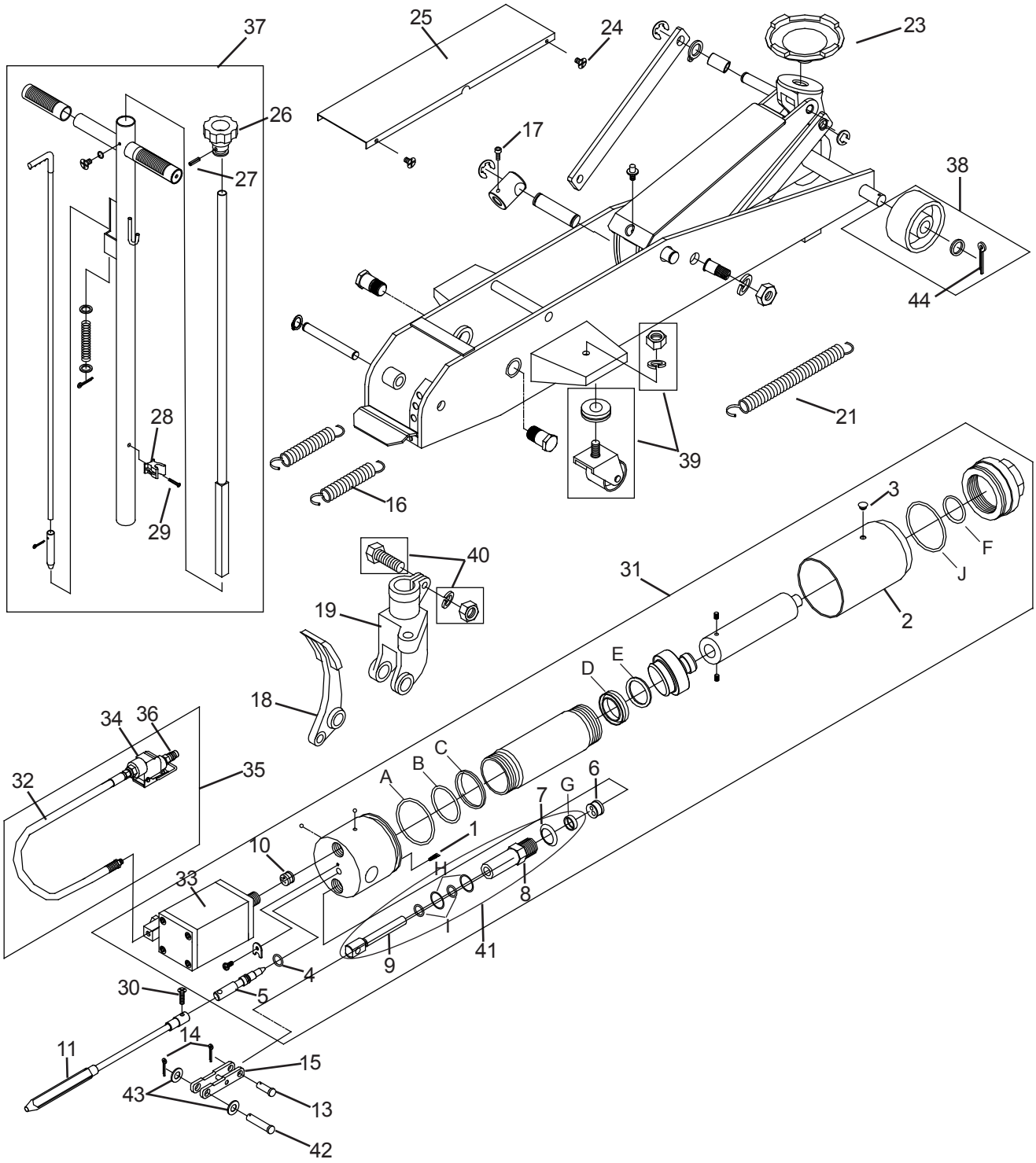

Figure 3 - Replacement Parts Illustration for Model 22041C

Replacement Parts List for Models 22040C & 22041C:

Item	22040C Part#	22041C Part#	Description	Qty
1	G251-20008-000		Filter	1
2	G423-20003-000		Reservoir	1
3	5905-00100-100		Filler Plug	1
4	5901-00071-000		O-ring, D7.1x2.65	1
5	G251-20004-000	G250-20004-000	Release Valve	1
6	G100-43000-000		Hyd. Cartridge	1
7	B300-14002-000		Washer	1
8	G651-31002-000		Pump Cylinder	1
9	G651-31001-000		Pump Piston	1
10	N/A	G100-44000-000	Hyd. Cartridge	1
11	G423-30000-000	G423-70000-000	Universal Joint	1
12	G251-00005-000	N/A	Spring	1
13	5405-12039-000		Pin	1
14	5405-02028-000		Retaining Pin	2
15	G423-40000-000		Piston Link	1
16	G100-00015-000		Return Spring, Pedal	2
17	5102-06015-000		Screw	1
18	G251-00009-000		Foot Pedal	1
19	G251-00010-000		Handle Fork	1
21	G423-00011-000		Return Spring	1
23	G423-00013-000		Saddle	1
24	5111-55020-000		Screw, Philips	4
25	G423-00010-000		Cover	1
26	G251-40001-000		Knob	1
27	5402-04028-000		Spring Pin	1
28	N/A	A070-40009-000	Hose clip	1
29		5110-04012-000	Screw, Philips	1
30	5110-05025-000	5107-05016-000	Screw	1
31	G423-20000-000	G423-60000-000	Hyd. Power Unit	1
32	N/A	A20060-0006	Air Hose	1
33		A27060-0003	Air Motor	1
34		A20060-0007	Lift Control Valve	1
35		A20060-0015	Hose Assembly	1
36		A20060-0016	Quick coupler, Male	1
37	G251-40000-000	G100-90009-K01	Handle Assembly	1
38	G423-90004-K01		Front Wheel Assembly	2
39	G250-90004-K02		Caster Assembly	2
40	G250-90009-K03		Bolt Assembly	1
41	G651-31000-000		Pump Assembly	1
42	5405-12050-000		Pin	1
43	5307-00012-000		Washer	2
44	5404-04030-000		Retaining Pin	2
45	5205-00005-000	N/A	Nut	1
-	G4230S-088 (includes 3,4 & A to J)		Seal Kit for Hyd. Unit	1
-	N/A	A27010-0000	Seal Kit for Air Motor	1
-		A270-01100-0000	Piston for Air Motor	1
-	22040C-L0	22041C-L0	Label (s)	-
-	22040C-M0		Manual	-

Replacement parts illustration for Models 22050C & 22051C

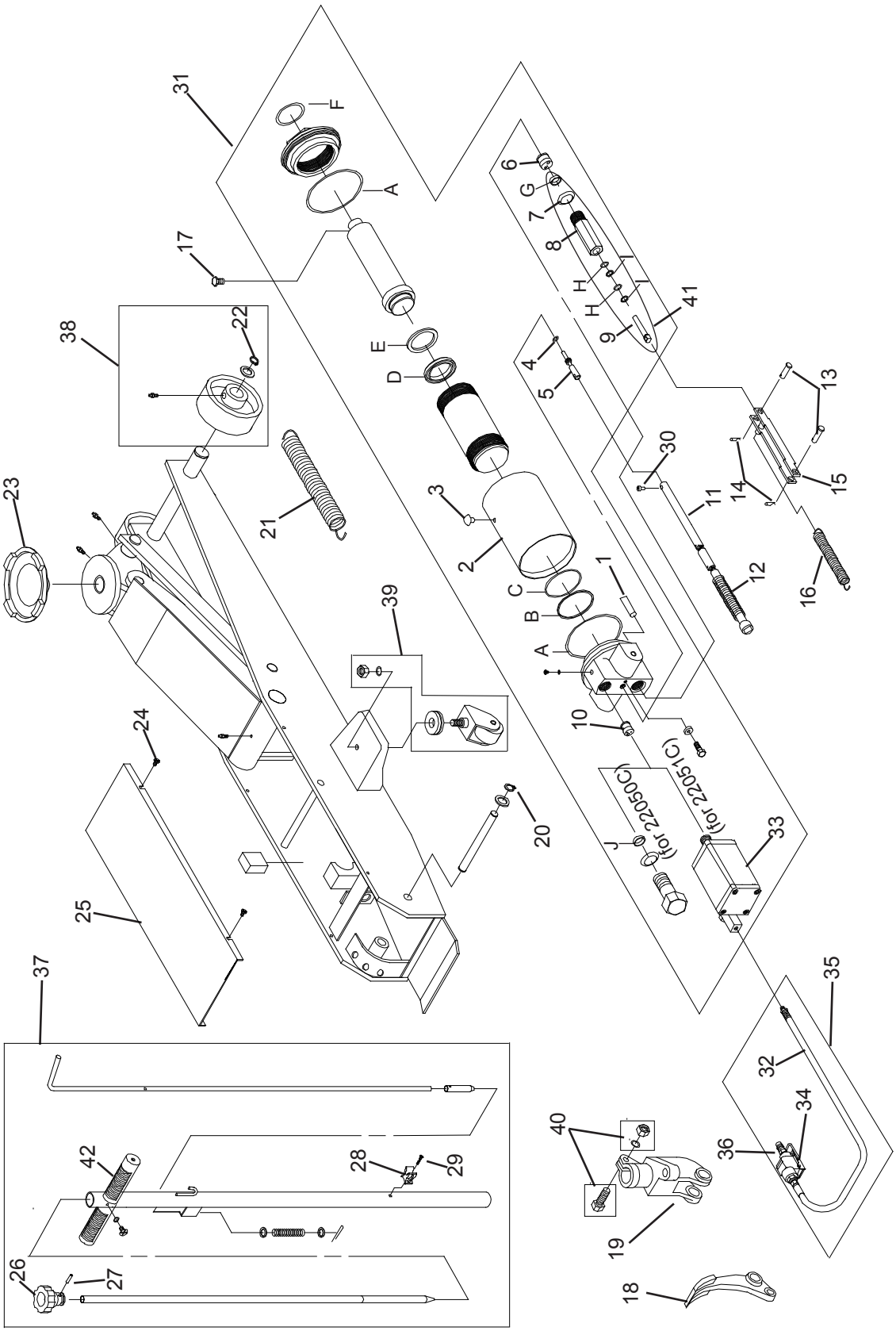

Figure 4 - Replacement Parts Illustration for Model 22050C & 22051C

Replacement Parts List for Models 22050C & 22051C:

Item	22050C	22051C	Description	Qty
1	G251-20008-000		Filter	1
2	G250-20002-000		Reservoir	1
3	5905-00100-200		Filler Plug	1
4	5901-00071-000		O-ring, D7.1x2.65	1
5	G250-20004-000		Release Valve	1
6	G250-24000-000		Hyd. Cartridge	1
7	B300-14002-000		Washer	1
8	G651-31002-000		Pump Cylinder	1
9	G651-31001-000		Pump Piston	1
10	G250-23000-000		Hyd. Cartridge	1
11	G250-30000-000		Universal Joint	1
12	G251-00005-000		Spring	1
13	5405-12036-000		Pin	2
14	5405-02028-000		Retaining Pin	2
15	G250-50000-000		Piston Link	1
16	G251-00004-000		Return Spring, Pedal	1
17	5110-06016-000		Screw	1
18	G251-00009-000		Foot Pedal	1
19	G251-00010-000		Handle Fork	1
20	5304-00018-000		Snap Ring	2
21	G251-00003-000		Return Spring	2
22	5304-00028-000		Snap Ring	2
23	G251-00002-000		Saddle	1
24	5110-06010-000		Screw, Philips	4
25	G250-00002-000		Cover	1
26	G251-40001-000		Knob	1
27	5402-04028-000		Spring Pin	1
28	N/A	A070-40009-000	Hose clip	1
29		5110-04012-000	Screw, Philips	1
30	5105-05012-000		Screw	1
31	G250-70000-000	G250-20000-000	Hyd. Power Unit	1
32	N/A	A20060-0006	Air Hose	1
33		A27060-0003	Air Motor	1
34		A20060-0007	Lift Control Valve	1
35		A20060-0015	Hose Assembly	1
36		A20060-0016	Quick coupler, Male	1
37	G250-40000-000		Handle Assembly	1
38	G250-90004-K01		Front Wheel Assembly	2
39	G250-90004-K02		Caster Assembly	2
40	G250-90009-K03		Bolt Assembly	1
41	G651-31000-000		Pump Assembly	1
42	G251-00007-000		Handle Grip	2
-	G2501S-074 (includes 3,4 & A to J)		Seal Kit for Hyd. Unit	1
-	N/A	A27010-0000	Seal Kit for Air Motor	1
-		A270-01100-0000	Piston for Air Motor	1
-	22050C-L0	22051C-L0	Label (s)	-
-	22040C-M0		Manual	-

Seal Kit (G2501S-074)Contents:

Item	Description	Qty
3	Filler Plug	1
4	O-ring, D7.1x2.65	1
A	O-ring, D116x4	2
B	O-ring, D73.8x3.5	1
C	Back-up Washer	1
D	U-cup	1

Item	Description	Qty
E	Back-up Washer	1
F	O-ring, D53x5	1
G	Packing	1
H	O-ring, D15x2.65	2
I	Back-up Washer	2
J	Packing (for 22050C only)	1

Replacement parts illustration for Models 22100C & 22101C

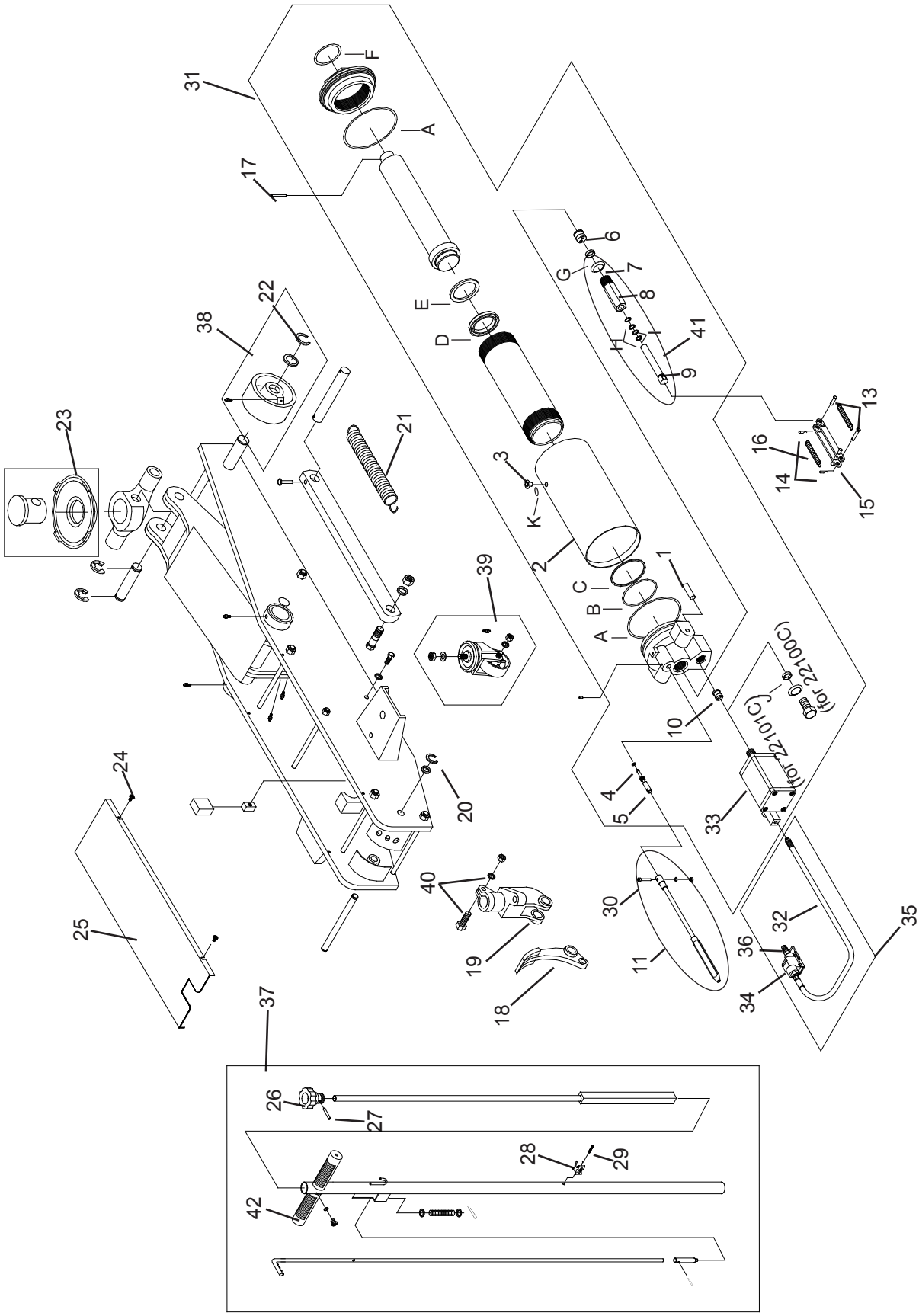

Figure 5 - Replacement Parts Illustration for Model 22100C & 22101C

Replacement Parts List for Models 22100C & 22101C:

Item	22100C	22101C	Description	Qty
1	G251-20008-000		Filter	1
2	G100-40003-000		Reservoir	1
3	G62S-03301-000		Filler Screw	1
4	5901-00071-000		O-ring, D7.1x2.65	1
5	G251-20004-000		Release Valve	1
6	G100-43000-000		Hyd. Cartridge	1
7	B300-14002-000		Washer	1
8	G651-31002-000		Pump Cylinder	1
9	G651-31001-000		Pump Piston	1
10	G100-44000-000		Hyd. Cartridge	1
11	G100-90009-K04		Universal Joint	1
13	5405-12039-000		Pin	2
14	5404-02028-000		Retaining Pin	2
15	G100-70000-000		Piston Link	1
16	G100-00015-000		Return Spring, Pedal	2
17	5402-05025-000		Pin	1
18	G251-00009-000		Foot Pedal	1
19	G251-00010-000		Handle Fork	1
20	5304-00018-000		Snap Ring	2
21	G100-00014-000		Return Spring	1
22	5305-00024-000		Snap Ring	2
23	G100-90009-K02		Saddle Assy.	1
24	5111-55022-000		Screw, Philips	4
25	G100-00016-000		Cover	1
26	G251-40001-000		Knob	1
27	5402-04028-000		Spring Pin	1
28	N/A	A070-40009-000	Hose clip	1
29		5110-04012-000	Screw, Philips	1
30	5110-05025-000		Screw	1
31	G100-80000-000	G100-40000-000	Hyd. Power Unit	1
32	N/A	A20060-0006	Air Hose	1
33		A27060-0003	Air Motor	1
34		A20060-0007	Lift Control Valve	1
35		A20060-0015	Hose Assembly	1
36		A20060-0016	Quick coupler, Male	1
37	G100-90009-K01		Handle Assembly	1
38	G100-90004-K02		Front Wheel Assembly	2
39	G661-70000-000		Caster Assembly	2
40	G250-90009-K03		Bolt Assembly	1
41	G651-31000-000		Pump Assembly	1
42	G251-00007-000		Handle Grip	2
-	G1001S-97 (4 & a to K)		Seal Kit for Hyd. Unit	1
-	N/A	A27010-0000	Seal Kit for Air Motor	1
-		A270-01100-0000	Piston for Air Motor	1
-	22100C-L0	22101C-L0	Label (s)	-
-	22040C-M0		Manual	-