OMEGA PRO

1/2” AIR IMPACT WRENCH

MODELS 82001 & 82002

82001

82002

This is the safety alert symbol. It is used to alert you to potential personal injury hazards. Obey all safety messages that follow this symbol to avoid possible injury or death.

SFA Companies

Read this manual and follow all the Safety Rules and Operating Instructions before using this product.

© Nov. 2015

Printed in Taiwan
82001-M3_112015

SAFETY AND GENERAL INFORMATION

Save these instructions. For your safety, read, understand, and follow the information provided with and on this device before using. The owner and/or operator shall have an understanding of the device, its operating characteristics and safety operating instructions before operating the equipment. The owner and/or operator shall be aware that use and repair of this product may require special skills and knowledge. Instructions and safety information shall be read to and discussed with the operator in the operator's native language, making sure that the operator comprehends their contents, before use of this equipment is authorized. If any doubt exists as to the safe and proper use of this device, remove from service immediately.

Inspect before each use. Do not use if abnormal conditions such as cracked welds, damaged, loose or missing parts are noted. Any equipment that appears damaged in any way, is found to be worn, or operates abnormally shall be removed from service until repaired. If the equipment has been or is suspected to have been subjected to an abnormal load or shock, immediately discontinue use until inspected by a factory authorized repair facility (contact distributor or manufacturer for list of authorized repair facilities). It is recommended that an annual inspection be made by an authorized repair facility. Labels and Operator's Manuals are available from the manufacturer.

Product Description

This is a hand-held air powered impact wrench designed to be used by one operator for the tightening, lossening or installing of threaded fasteners.

Specifications

Item	82001	82002
Drive Size	1/2" Square	1/2" Square
Max. Torque	500 ft.-lbs.	450 ft.-lbs.
Max. Pressure	90 PSI	90 PSI
Air Consumption	4.76 CFM	4.2 CFM
Hammer Mechanism	Twin Hammer	Twin Hammer
Air Inlet	1/4"	1/4"
Hoes Size	3/8"	3/8"

Operating Instructions

Note: Before use ensure that the air line is free of dust and moisture

1. Insert 1/4" air inlet nozzle (not included) to the port on the bottom of the handle. Use thread tape (not included) on the nozzle to ensure a good connection. If a poor connection is made between the inlet nozzle and the air tool, performance may be affected.
2. Attach a socket of the correct size to the anvil.

Caution: Attach socket to anvil prior to connecting tool to air pressure. Accidental trigger pull could result in personal injury

3. Before connecting the air hose to the air inlet nozzle, apply 4 or 5 drops of pneumatic oil into the air inlet. Attach air hose to the air inlet nozzle. The max. air pressure to be used is 90 psi. and the air compressor regulator should never be set above 90 psi. doing so could result in damage to the tool.

Note: It is recommended to have an air filter, regulator and lubricator in-line between the compressor and air tool. If a lubricator is not used, lubricate the air motor every 3 or 4 hours of operation.

4. This impact wrench has a speed regulator on the rear of the tool. There are 3 speed settings for both clockwise and counter-clockwise directions. Select the desired setting and pull trigger to operate.

Note: To reverse direction for model 82002 press the speed regulator dial side to side.

⚠ WARNING

Operating Hazards

- The use this too can expose the operator's hands to hazards including, impacts, cuts and abrasions and heat. Wear suitable gloves to protect hands.
- Operators and maintenance personnel shall be physically able to handle the bulk, weight and power of the tool.
- Hold the tool correctly; be ready to counteract normal or sudden movements and have both hands available.
- Maintain a balanced body position and secure footing.
- In cases where the means to absorb the reaction torque are requested, it is recommended to use a suspension arm whenever possible. If that is not possible, side handles are recommended for straight-case and pistol-grip tools. It is recommended to use a means to absorb the Reaction torque above 2.95 ft.-lbs. (4 N•m) for straight tools, above 7.38 ft.-lbs. (10 N•m) for pistol-grip tools.
- Release the start-and-stop device in the case of an interruption of the energy supply.
- Do not use in confined spaces and beware of crushing hands between tool and workpiece

Workplace Hazards

- Slips, trips and major causes of workplace injury. Be aware of slippery surfaces caused by the use of the tool and also of trip hazards caused by the air line or hydraulic hose.
- Proceed with care in unfamiliar surroundings. Hidden hazards, such as electricity or other utility lines, can exist.
- The impact wrench is not intended for use in potentially explosive atmospheres and is not insulated against coming into contact with electric power.
- Make sure there are no electrical cables, gas pipes, etc., that can cause a hazard if damaged by use of the tool.
- Dust and fumes generated when using impact wrench can cause ill health (for example cancer, birth defects, asthma and/or dermatitis); risk assessment and implementation of appropriate controls for these hazards are essential.
- Direct the exhaust so as to minimize disturbance of dust in a dust-filled environment.
- Use respiratory protection in accordance with employer's instructions and as required by occupational health and safety regulations.

Projectile Hazards

- Failure of the workpiece,of accessories or even of the inserted tool itself can generate high-velocity projectiles.
- Always wear impact-resistant eye protection during the operation of the impact wrench. The grade of protection required should be assessed for each use.
- Ensure that the workpiece is securely fixed.

Entanglement Hazards

- Entanglement hazards can result in choking, scalping and/or lacerations if loose clothing, personal jewelery, neckware, hair or gloves are not kept away from the tool and accessories.
- Gloves can become entangled with the rotating drive, causing severed or broken fingers.
- Rotating drive sockets and drive extensions can easily entangle rubber-coated or metal-reinforced gloves.
- Do not wear loose-fitting gloves with cut of frayed fingers.
- Never hold the drive, socket or drive extension.
- Keep hands away from rotating drives.

Noise Hazards

- Exposure to high noise levels can cause permanent, disabling loss and other problems, such as tinnitus (ringing, buzzing, whistling or humming in the ears). Therefore a risk assessment and implementation of appropriate controls for these hazards are essential.
- Appropriate controls to reduce the risk may include actions such as damping materials to prevent workpieces from "ringing".
- Use hearing protection in accordance with employer's instructions and as required by occupational health and safety regulations.
- Operate and maintain the impact wrench as recommended in the instructions handbook, to prevent an unnecessary increase in noise levels.
- Select, maintain and replace the consumable/inserted tool as recommended in the instructions handbook, to prevent an unnecessary increase in noise.

Vibration Hazards

- Exposure to vibration can cause disabling damage to the nerves and blood supply of the hands and arms.
- Wear warm clothing when working in cold conditions and keep your hands warm and dry.
- If you experience numbness, tingling, pain or whitening of the skin in your fingers or hands, stop using the impact wrench, tell your employer and consult a physician.
- Operate and maintain the impact wrench as recommended in the instructions handbook, to prevent an unnecessary increase in vibration levels.
- Do not use worn or ill-fitting sockets or extensions, as this is likely to cause a substantial increase in vibration.
- Hold the tool with a light but safe grip, taking account of the required hand reaction forces, because the risk from vibration is generally greater when the grip force is higher.
- Support the weight of the tool in a stand, tensioner or balancer, if possible.
- Sleeve fittings should be used where practicable.

Repetitive Motion Hazards

- If the operator experiences symptoms such as persistent or recurring discomfort, pain, throbbing, aching, tingling, numbness, burning sensations or stiffness, these warning signs should not be ignored. The operator should cease use of the tool, tell the employer and consult a qualified health professional.

Maintenance Hazards

- Disconnect air hose from tool prior to any maintenance work.

REPLACEMENT PARTS (ref. pages 4 & 5)

Not all components of the tool are replacement items, but are illustrated as a convenient reference of location and position in the assembly sequence. When ordering parts, please give the Model number, part number and parts description. Call or write for current pricing: SFA Companies 10939 N. Pomona Ave. Kansas City, MO 64153, U.S.A. E-Mail: sales@omegalift.com Tel: (888) 332-6419 Fax: (816) 891-6599

82001 Replacement Parts:

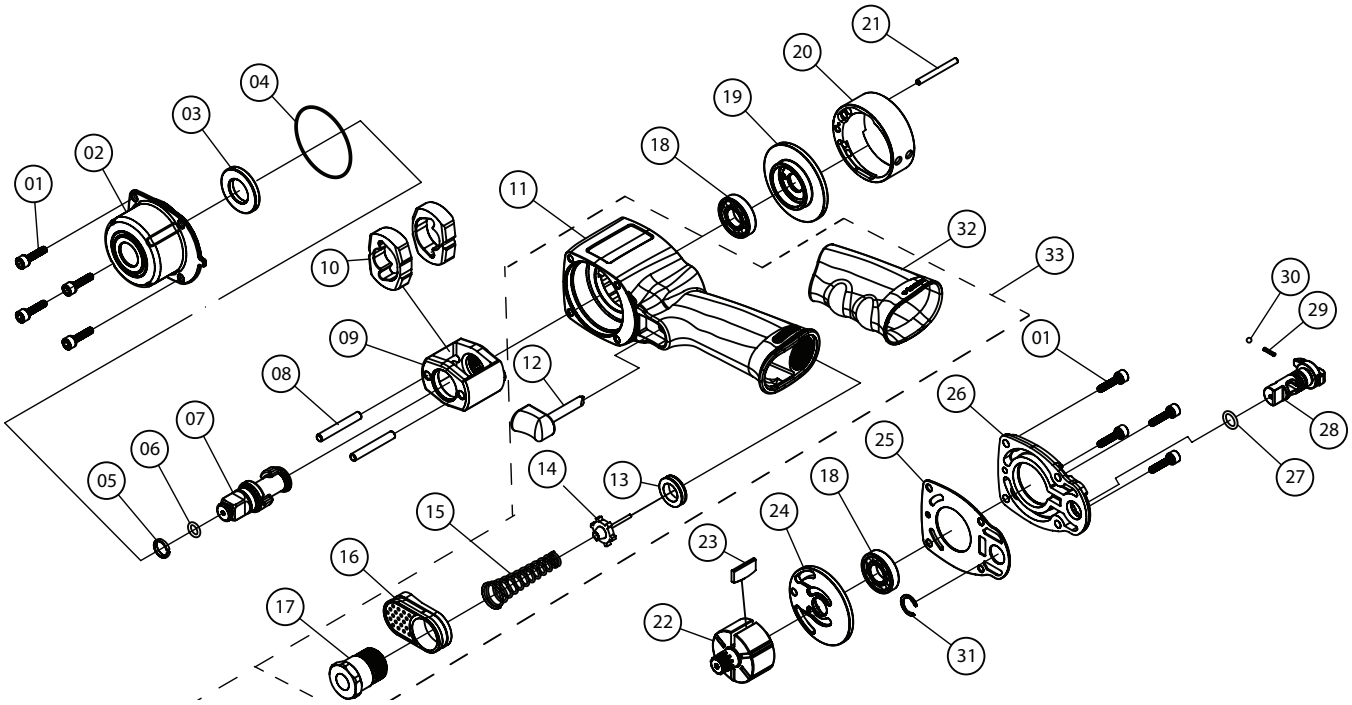

Item No.	Part No.	Description	Qty.
1	-	Screw	8
2	-	Hammer Housing	1
3	-	Anvil Bushing	1
4	*	O-Ring	1
5	*	Socket Retainer	1
6	*	Retainer O-Ring	1
7	-	1/2” Anvil	1
		3/8” Anvil	1
8	-	Hammer Pin	2
9	-	Hammer Cage	1
10	-	Hammer Dog	2
11	-	Motor Housing	1
12	208012	Trigger	1
13	*	Throttle Bushing	1
14	*	Valve Stem	1
15	-	Spring	1
16	-	Exhaust Deflector	1
17	-	Inlet Bushing	1

Item No.	Part No.	Description	Qty.
18	-	Ball Bearing	2
19	-	Front Plate	1
20	-	Cylinder	1
21	-	Cylinder Pin	1
22	-	Rotor	1
23	*	Rotor Blade	6
24	-	Rear Plate	1
25	*	Gasket	1
26	-	Housing Cap	1
27	*	O-Ring	1
28	-	Reverse Valve	1
29	*	Spring	1
30	*	Steel Ball	1
31	*	Retainer	1
32	-	Grip	1
33	208033	Grip Assembly (Includes # 12)	1
34	82001-99	Repair Kit	*

* Signifies part of repair kit.

** Installation of replacement parts may require specials skills and knowledge.

82002 Replacement Parts:

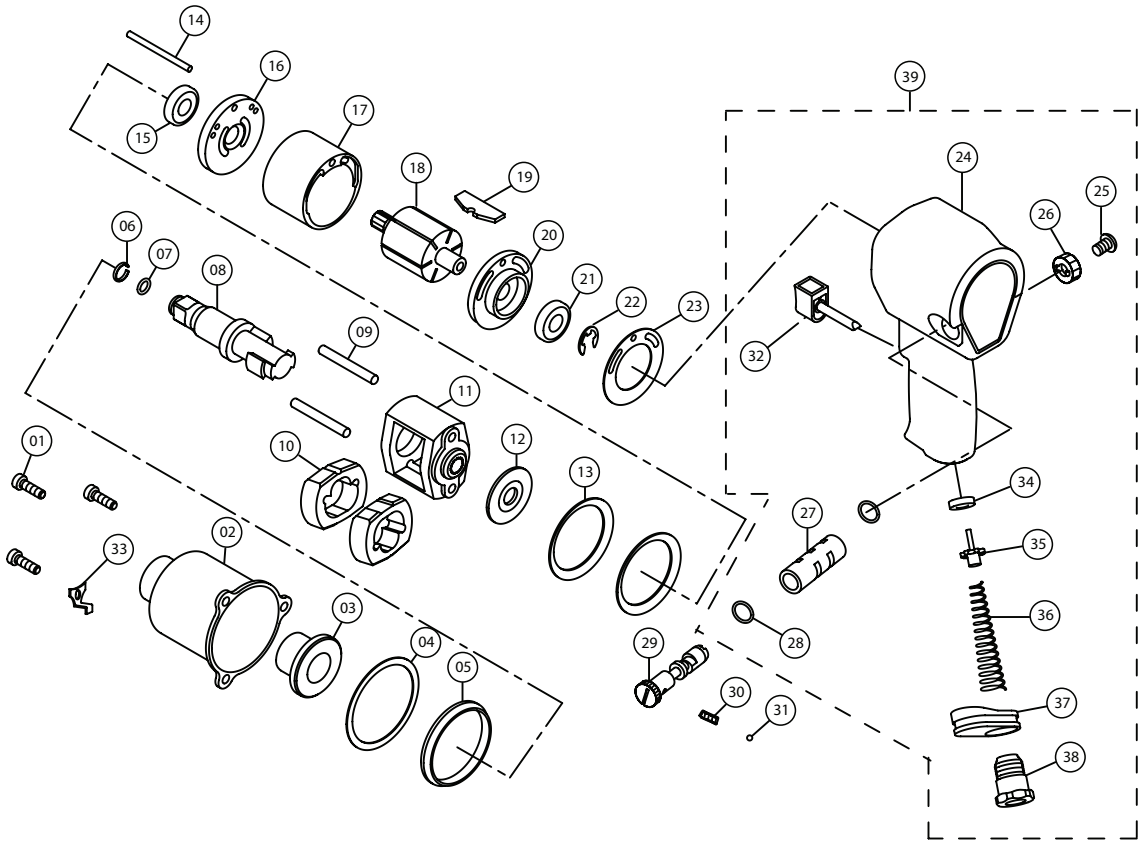

Item No.	Part No.	Description	Qty.
1	-	Screw	3
2	-	Clutch Housing	1
3	-	Anvil Bushing	1
4	*	Front Gasket	1
5	-	Clutch Housing Pilot	1
6	*	Anvil Collar	1
7	*	O-Ring	1
8	-	1/2” Anvil	1
		2” Extended 1/2” Anvil	1
9	-	Hammer Pin	2
10	-	Hammer Dog	2
11	-	Hammer Cage	1
12	-	Hammer Washer	1
13	-	Disc Spring	2
14	-	Cylinder Pin	1
15	-	Ball Bearing	1
16	-	Front End Plate	1
17	-	Cylinder	1
18	-	Rotor	1
19	*	Rotor Blade	6
20	-	Rear End Plate	1

Item No.	Part No.	Description	Qty.
21	-	Ball Bearing	1
22	*	E-Ring	1
23	*	End Plate Gasket	1
24	-	Motor Housing	1
25	-	Screw	1
26	-	Reverse Valve Knob	1
27	-	Valve Sleeve	1
28	-	O-Ring	2
29	-	Reverse Valve	1
30	*	Spring	1
31	*	Steel Ball	1
32	302033	Trigger	1
33	302034	Trigger Fixture	1
34	*	Throttle Bushing	1
35	*	Valve Stem	1
36	-	Spring	1
37	-	Muffle Cover	1
38	-	Hose Fitting	1
39	302041	Motor Housing Assembly	1
40	82002-99	Repair Kit	*

* Signifies part of repair kit.

** Installation of replacement parts may require specials skills and knowledge.

ONE YEAR LIMITED WARRANTY

For a period of one (1) year from date of purchase, **SFA COMPANIES, INC.** will repair or replace, at its option, without charge, any of its products which fails due to a defect in material or workmanship under normal usage. This limited warranty is a consumer's exclusive remedy.

Performance of any obligation under this warranty may be obtained by returning the warranted product, freight prepaid, to **SFA COMPANIES, INC.** Warranty Service Department, 10939 N. Pomona Ave., Kansas City, MO 64153.

Except where such limitations and exclusions are specifically prohibited by applicable law, (1) THE CONSUMER'S SOLE AND EXCLUSIVE REMEDY SHALL BE THE REPAIR OR REPLACEMENT OF DEFECTIVE PRODUCTS AS DESCRIBED ABOVE. (2) **SFA COMPANIES, INC.** SHALL NOT BE LIABLE FOR ANY CONSEQUENTIAL OR INCIDENTAL DAMAGE OR LOSS WHATSOEVER. (3) ANY IMPLIED WARRANTIES, INCLUDING WITHOUT LIMITATION THE IMPLIED WARRANTIES OF MERCHANTABILITY AND FITNESS FOR A PARTICULAR PURPOSE, SHALL BE LIMITED TO ONE YEAR, OTHERWISE THE REPAIR, REPLACEMENT OR REFUND AS PROVIDED UNDER THIS EXPRESS LIMITED WARRANTY IS THE EXCLUSIVE REMEDY OF THE CONSUMER, AND IS PROVIDED IN LIEU OF ALL OTHER WARRANTIES, EXPRESS OR IMPLIED. (4) ANY MODIFICATION, ALTERATION, ABUSE, UNAUTHORIZED SERVICE OR ORNAMENTAL DESIGN VOIDS THIS WARRANTY AND IS NOT COVERED BY THIS WARRANTY.

Some states do not allow limitations on how long an implied warranty lasts, so the above limitation may not apply to you. Some states do not allow the exclusion or limitation of incidental or consequential damages, so the above limitation or exclusion may not apply to you. This warranty gives you specific legal rights, and you may also have other rights, which vary from state to state.

SFA Companies
10939 N. Pomona Ave. Kansas City, MO 64153
888-332-6419

OMEGA PRO

SFA Companies
10939 N. Pomona Ave. Kansas City, MO 64153
888-332-6419

OMEGA PRO

SFA Companies
10939 N. Pomona Ave. Kansas City, MO 64153
888-332-6419