Shop Press Instruction Manual

MODELS: IMP2506, IAP2506, IMPD2506, IEPD2506 **CAPACITY: 25 Ton**
IMP2514, IAP2514, IEP2506, IEP2514 & IEPS2514

SFA Companies 10939 N. Pomona Ave. Kansas City, MO 64153
Tel: 888-332-6419 - Fax: 816-448-2142
E-mail: sales@bvahydraulics.com Website: www.bvahydraulics.com

Max. Operating Pressure 10,000 PSI

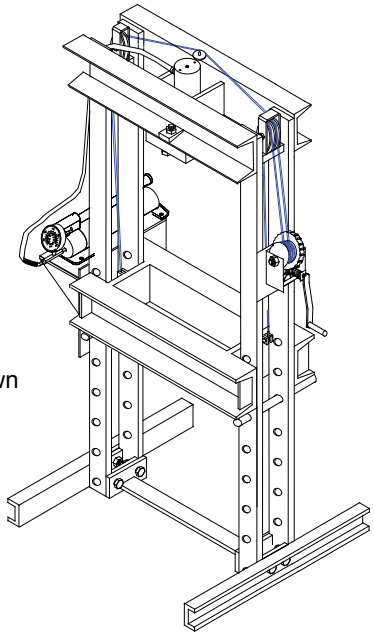

Model IMP2506 shown

This is the safety alert symbol. It is used to alert you to potential personal injury hazards. Obey all safety messages that follow this symbol to avoid possible injury or death.

ADVERTENCIA

- Leer, comprender, y seguir las instrucciónes antes de utilizar el aparato.
- El manual de instrucciónes y la información de seguridad deben estar comunicado en lengua del operador antes del uso.
- No seguir estas indicaciónes puede causar daños personales o materiales.

WARNING

To avoid crushing and projectile injuries:
- An ASME B15.1-2000 compliant guard shall be installed on this device before use.
- Wear personal protective equipment when operating this equipment.

Read this manual and follow all the Safety Rules and Operating Instructions before using this product.

Printed in U.S.A

⚠ WARNING

- Study, understand, and follow all instructions before operating the device.
- Do not exceed rated capacity.
- Prior to use, make sure press is securely anchored.
- The press shall be installed and operated in accordance with federal (OSHA), state and local safety standards.
- Operators and observers shall wear eye protection that meets ANSI Z87.1 and OSHA standards.
- Keep hands, arms, feet and legs out of the work area. Accidental slippage can result in personal injury.
- Use appropriate guarding to contain any pieces that may break or fly apart when applying force.
- Use only press accessories having a capacity rating equal to or greater than the capacity of the press.
- Verify lift cables are slack before pressing on the bolster.
- Avoid off-center loads.
- No alterations shall be made to the product.
- Failure to heed and understand these instructions and markings may result in personal injury, property damage or both.

SAFETY AND GENERAL INFORMATION

Save these instructions. For your safety, read and understand the information contained within. The owner and operator shall have an understanding of this product and safe operating procedures before attempting to use this product. Instructions and safety information shall be conveyed in operator's native language before use of this product is authorized. Make certain that the operator thoroughly understands the inherent dangers associated with the use and misuse of the product. If any doubt exists as to the safe and proper use of this product as outlined in this factory authorized manual, remove from service immediately.

Inspect before each use. Do not use if broken, bent, cracked or otherwise damaged parts are noted. If any component of this product has been or suspected to have been subjected to a shock load (a load dropped suddenly, unexpectedly upon it), discontinue use until checked out by qualified personnel such as an Authorized Service Center. Owners and operators of this equipment shall be aware that the use and subsequent repair of this equipment may require special training and knowledge. It is recommended that an annual inspection be done by qualified personnel and that any missing or damaged parts, decals, warning/safety labels or signs be replaced with factory authorized replacement parts only. Any component of this Equipment that appears to be damaged in any way, is worn or operates abnormally shall be removed from service immediately until such time as it can be repaired/replaced. Labels and Instruction Manuals are available from manufacturer.

PRODUCT DESCRIPTION

BVA Shop presses are designed for automotive, truck, implement, fleet, and industrial repair shops where pressing, bending, straightening, forming is required. Each press includes a cylinder and a pump. A winch assembly provides a safe and efficient way to raise and lower the bed frame, and a pressure gauge which provides for monitoring the applied press force. Typical applications include installation and removal of alternator and power steering pump bearings, axle bearings, transmission bearings, seal, driveshaft bearings and u-joints and others. It is not intended for use as an assembly table or as fixture stand used to secure a large, final assembly component.

WARNING: *Wear personal protective gear when operating this equipment.*

⚠ **WARNING:** *Avoid damaging hydraulic hose. Do not allow hose to kink, twist, curl, crush, cut or bend so tightly that fluid flow within the hose is blocked or reduced. Periodically inspect the hose for wear. To reduce the risk of personal injury and/or property damage, ensure rated working pressure of each pressurized attachment is equal to or greater than rated working pressure of pump.*

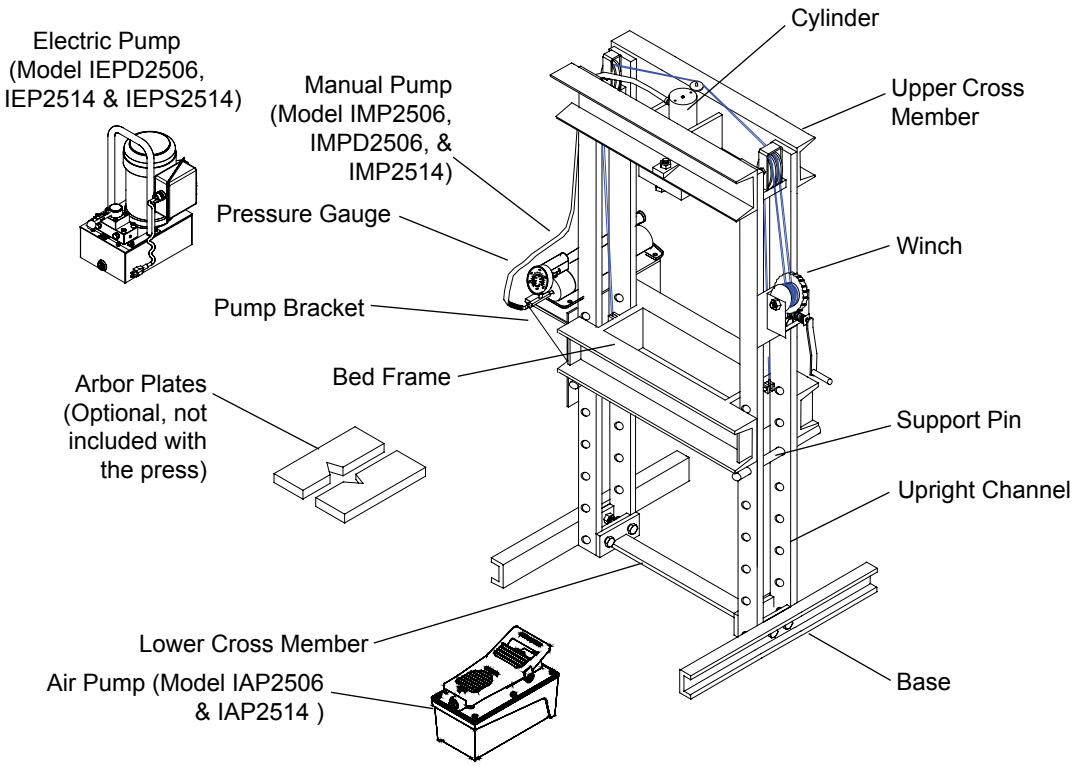

Figure 1 - Typical Shop Press Components

SPECIFICATIONS

Press Model	Rated Capacity (tons)	Cylinder Stroke/Model (in)	Pump Model	Bed Width	Press Size (H" x W" x L")	Min. Work Space (in)	Max. Work Space (in)
IMP2506	25	6/H2506	P1000	11-1/2	71 x 48 x 28	4-1/2"	47-1/4"
IMPD2506		6/HD2506	P2301M				
IAP2506		6/H2506	PA1500				
IEP2506			PE30W3N01A				
IEPD2506		6/HD2506	PE30W4N01A				
IMP2514		14/H2514	P2001				
IAP2514			PA1500				
IEP2514			PE30W3N01A				
IEPS2514			PE30S3L01A				

Cylinders

Cylinder Model	Rated Capacity (ton)	Effective Area (in^2)	Oil Volume (in^2)	Min. Height (in)	Min. Height (in)	Outer Dia. (in)	Ram Dia. (in)	Saddle Dia. (in)	Collar Thread	Collar Thread Length (in)
H2506	25	5.14	30.53	10.79	16.73	3.35	2.24	1.97	3-5/16"-12 UNC	1.93
H2514			73.25	18.74	32.99					
HD2506			30.53	10.29	16.19		1.77			.98

Manual Pumps

Hand Pump Model	Usable Oil Volume (in^3)	Pressure Rating (psi)		Oil Displacement (in^3)		Oil Outlet Port Thread	Weight (lbs)
		1st Stage	2nd Stage	1st Stage	2nd Stage		
P1000	61.0	200	10,000	0.81	0.14	3/8”-18 NPTF	13.2
P2001	122.0						24.2
P2301M	128.0						32.3

Air Pumps

Air Pump Model	Usable Oil Volume (in^3)	Pressure Rating (psi)	Oil Output Flow Rate (in^3/min)		Input Air Pressure Range (psi)	Weight (lbs)
			No Load	Load		
PA1500	91.5	10,000	66	11	110 - 175	18.1

Electric Pumps

Electric Pump Model	Capacity (gal)	Pressure Rating (psi)		Oil Output Flow Rate (in^3/min)		Valve Type	Motor Size (hp)	Current Draw (A)	Motor Voltage (V)	Weight (lbs)
		1st Stage	2nd Stage	1st Stage	2nd Stage					
PE30W4N01A	1	350	10,000	293	18	4-way, 3-pos	0.5	9	115/125	60
PE30W3N01A						3-way 3-pos				
PE30S3L01A										

NOTICE: *The power retract feature of the IMPD2506 and IEPD2506 Shop Presses is not intended to be used under load. Never pull or raise a workpiece with the power retract feature.*

ASSEMBLY

1. Adjust bed frame to lowest position and slacken winch cable.
2. Install the winch assembly to the press using 3 bolts, washers and nuts.
3. Secure cylinder to the cylinder adapter plate, and mount the adapter plate to upper cross member using 4 bolts and washers.

NOTICE: *The cylinder comes with carrying handles, loosen Allen head socket screw to remove the handles.*

4. Attach base sections to upright channels with 4 bolts and nuts.
5. Attach lower cross member to upright channels with 4 bolts and nuts.
6. Attach and secure the pump bracket with bolts, nuts & washers provided. (Model IMP2506 & IMPD2506 only)
7. Connect pressure gauge and hydraulic hose to gauge adapter, then connect gauge adapter to pump.

NOTICE: Use *thread tape or compound on all connections.*

8. *For Model IMP2506, IMP2514 & IMPD2506:* Place pump on pump bracket and connect hydraulic hose end to cylinder.

⚠ **CAUTION:** *Before disassembly, slide bed frame section down to lowest position.*

OPERATION

Before Use

1. Inspect before each use. Do not use if bent, broken or cracked components are noted. Check for and tighten any loose assemblies. Replace worn or damaged parts and assemblies with BVA authorized replacement parts only.
2. Verify that the product and the application are compatible, if in doubt contact BVA Technical Service (816) 891-6390.
3. Before using this product, read this operator’s manual completely and familiarize yourself thoroughly with the product, its components. Recognize the potential hazards associated with its use.

WARNING: *Projectile hazard! Ensure that workpiece is centerloaded and secure. Reduce risk of flying debris by carefully following all operating instructions. Know your press and hazards associated with its use.*

WARNING: *Risk of serious eye injury from projected or blown debris. Wear safety goggles when working with or around press.*

CAUTION: *Hose material or seals must not come in contact with corrosive materials such as battery acid, creosote-impregnated objects and wet paint. Never paint a coupler or hose. Do not subject hose to sharp objects or heavy impact.*

Refer to cylinder and pump manual for detailed operating instruction.

1. Insert the support pins to desired height, then lower the bed frame using the winch until the cable is slack and the bed frame is resting fully on the support pins.
2. Place arbor plates on the bed frame (optional).
3. Place workpiece on bed frame, using every precaution necessary to ensure your safety and prevent property damage.
4. Operating the pump:
   a) *For Model IMP2506, IMP2514 & IMPD2506 (manual)*: Close the release valve by turning it clockwise, and pump the handle to extend the cylinder ram. To retract, simply open the release valve of pump.
   b) *For Model IAP2506 & IAP2514 (air)*: Connect to suitable air supply, press on the foot pedal to extend the cylinder ram. To retract, simply press the release valve by stepping on the raised, stirrup shaped portion of the foot pedal.
   c) *For Model IEPD2506, IEP2506 IEP2514 & IEPS2514 (electric)*: Engage ON/OFF switch to start electric pump and let idle for several minutes before operating cylinder. Use control knob to extend cylinder ram.

NOTICE: *Never operate pump with hose disconnected from cylinder. Operation in this condition causes hoses to pressurize, increasing burst hazard. To protect cylinder, do not operate pump after ram is fully extended.*

NOTICE: *The power retract feature of the IMPD2506 and IEPD2506 Shop Presses is not intended to be used under load. Never pull or raise a workpiece with the power retract feature.*

5. Apply load to workpiece. **Do not overload.**
6. Stabilize workpiece to prevent it from falling from the bed once load is removed.
7. Once cylinder has fully retracted, remove workpiece.

MAINTENANCE

Refer to cylinder and pump manuals for maintenance and instructions for adding/changing hydraulic fluid. For best results, change fluid once per year. Use only premium hydraulic oil or equivalent for manual and air pumps, premium hydraulic oil or equivalent for electric pump is recommended.

Lubrication

A periodic coating of light lubricating oil to pivot points and hinges will help to prevent rust and assure assemblies move freely.

Storage

Depressurize the hydraulic system, disconnect the hydraulic hose and lower the bed frame to lowest position. Disconnect both hoses on the IMPD2506 and the IEPD2506.

TROUBLESHOOTING

A system failure may or may not be the result of a pump malfunction. The following information is intended to be used as an aid in determining if a problem exists. For repair service, contact a BVA authorized service center.

Symptom	Possible Causes	Corrective Action
Erratic cylinder action	• External leak • Internal hydraulic leak	• Follow pump instructions for bleeding air • Tighten all connections • Contact Service Center
Pump or cylinder fails to maintain pressure	• Overload condition • External leak • Internal hydraulic leak • Cylinder seals leaking • Pump or valve malfunctioning	• Remedy overload condition • Tighten all connections • Contact Service Center • Contact Service Center • Check pump operating instructions
Cylinder extends partially	• Hydraulic oil level too low in pump • Load is above the capacity of system • Cylinder is sticking or binding	• Fill and bleed the system • Match the capacity to application • Contact Service Center
Cylinder moves slower than normal	• Loose connection or coupler • Restricted hydraulic line or fitting • Pump not working correctly • Cylinder seals leaking	• Tighten connection or coupler • Clean and replace if damaged • Check pump operating instructions • Replace cylinder
Cylinder leaks hydraulic fluid	• Worn or damaged seals • Linkage binding • Loose couplers • Malfunctioning coupler	• Contact Service Center • Lubricate all moving parts • Tighten couplers • Depressurize pump and hose, remove application, install new coupler
Cylinder will not retract or retracts slower than normal	• Weak or broken retraction spring, Cylinder damaged internally • Pump reservoir too full	• Contact Service Center • Contact Service Center • Drain hydraulic fluid to correct level
Motor will not start (Model IEPD2506, IEP2514 & IEPS2514)	• No power/incorrect voltage • Damaged power cord • Tripped circuit breaker • Loose or faulty wiring	• Check power supply and voltage • Contact Customer Service • Ensure breaker is adequate size • Contact Customer Service
Motor cuts out (Model IEPD2506, IEP2514 & IEPS2514)	• Extension cord too long • Faulty motor • Overheated motor trips breaker	• Replace with shorter cord • Replace or repair motor • Allow motor to cool, reset circuit breaker

Shop Press Service Parts

INCLUDES MODELS: IMP2506, IAP2506, IMPD2506, IEPD2506
IMP2514, IAP2514, IEP2506, IEP2514 & IEPS2514

SFA Companies 10939 N. Pomona Ave. Kansas City, MO 64153
Tel: 888-332-6419 - Fax: 816-448-2142
E-mail: sales@bvahydraulics.com Website: www.bvahydraulics.com

Note: Not all components of the press are replacement items, but are illustrated as a convenient reference of location and position in the assembly sequence.

Parts Illustration

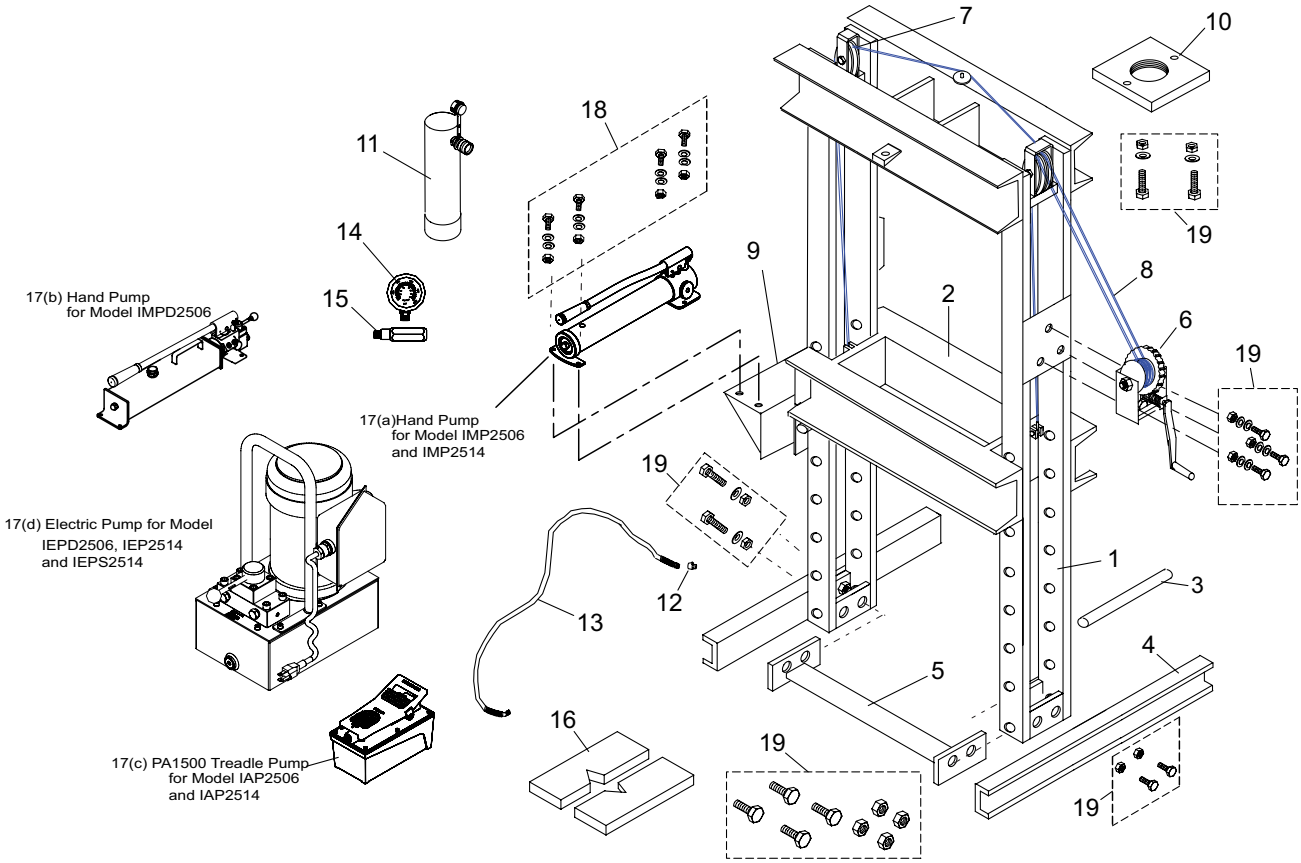

Figure 3- Replacement Parts Illustration for Model IAP2506, IEPD2506, IMP2506, IMPD2506, IMP2514, IAP2514, IEP2514 & IEPS2514

Shop Press Service Parts

INCLUDES MODELS: IMP2506, IAP2506, IMPD2506, IEPD2506
IMP2514, IAP2514, IEP2506, IEP2514 & IEPS2514

SFA Companies 10939 N. Pomona Ave. Kansas City, MO 64153
Tel: 888-332-6419 - Fax: 816-448-2142
E-mail: sales@bvahydraulics.com Website: www.bvahydraulics.com

Note: Not all components of the press are replacement items, but are illustrated as a convenient reference of location and position in the assembly sequence.

Item	Part No. for Model					Description	Qty
	IMP2506/ IMP2514	IMPD2506	IAP2506/ IAP2514	IEPD2506	IEP2506/ IEPS2514		
1	N/A					Frame w/Winch and Pump Bracket	1
2	N/A					Bed Frame	1
3	300-002-003					Support Pin	2
4	IAP-002-004					Base	2
5	IAP-002-005					Lower Cross Member	1
6	300-002-006					Winch	1
7	300-002-007					Pulley	3
8	300-002-008					Cable	2
9	IAP-002-009		N/A			Pump Bracket	1
10	IAP-002-012					Cylinder Adapter Plate	1
11	H2506/ H2514	HD2506	H2506/ H2514	HD2506	H2506/H2514	25 Ton Cylinder	1
12	CH38M					Coupler, Male, 3/8”	1*
13	CS3838		CS3838C			Hydraulic Hose, 3/8” ID	1*
14	GD2514					Dry Gauge, 2.5”, 10,000 psi	1
15	CF3814					Gauge Adapter	1
16	AP25					Arbor Plates	1
17	a.) P1000/ P2001	b.) P2301M	c.) PA1500	d.) PEM0501T	d.) PEW0501T PESL0501T	Pump	1
18	300-002-016		N/A			Pump Mounting Hardware Kit	1
19	300-002-017					Hardware Kit	1
20	IAP2506-M0					OIPM	1
21	IMP2506-L0/ IMP2514-L0	IMPD2506-L0	IAP2506-L0/ IAP2514-L0	IEPD2506-L0	IEP2514/ IEPS2514	Label Kit	1

* Qty 2 for IMPD2506 and IEPD2506 Double Acting Presses

LIMITED LIFETIME WARRANTY

BVA Hydraulics®, represented in the United States by SFA Companies [“SFA”] warrants this product to be free from defects in material and workmanship for the life of the product as long as the original purchaser owns the product. The warranty is nontransferable and is subject to the terms, exclusions, and limitations described below:

- Damaged components, including but not limited to bent rams, dented or crushed cylinder walls, broken welds or couplers as well as worn out seals, o-rings and springs are the result of misuse and not covered by warranty and BVA Hydraulics will not provide any warranty credit for such damaged components.

- This warranty does not cover ordinary wear and tear, overloading, alterations (including repairs or attempted repairs not performed by BVA Hydraulics or one of its authorized personnel), improper fluid use, or use of the product in any manner for which the product was not intended or the use of which is not in accordance with the instructions or warnings provided with the product.

- In the unlikely event that a BVA Hydraulics product fails due to material defect in workmanship, you may contact SFA Companies for disposition. In such cases, the customer’s sole and exclusive remedy for any breach or alleged breach of warranty is limited to the repair or replacement of the defective product.

- Under no circumstances is BVA Hydraulics liable for any consequential or incidental damage or loss whatsoever.

- THIS WARRANTY IS LIMITED TO NEW PRODUCTS SOLD THROUGH AUTHORIZED DISTRIBUTORS AND OTHER CHANNELS DESIGNATED BY BVA HYDRAULICS. NO AGENT, EMPLOYEE OR OTHER REPRESENTATIVE OF BVA HYDRAULICS IS AUTHORIZED TO MODIFY THIS WARRANTY.

- THE FOREGOING IS EXCLUSIVE AND IS IN LIEU OF ALL OTHER EXPRESS AND IMPLIED WARRANTIES, INCLUDING BUT NOT LIMITED TO THE IMPLIED WARRANTIES OF MERCHANTABILITY AND FOR A FITNESS FOR A PARTICULAR PURPOSE.

- Components not manufactured by BVA Hydraulics including certain motor systems, gasoline engines, and other are not covered by this warranty and instead are covered by the manufacturer’s separate manufacturer’s warranty provided in the package.

- BVA Hydraulics’ liability in all cases is limited to, and will not exceed the purchase price paid for the product.

SFA Companies
10939 N. Pomona Ave. Kansas City, MO 64153
Tel: 888-332-6419
E-mail: sales@bvahydraulics.com

SFA Companies
10939 N. Pomona Ave. Kansas City, MO 64153
Tel: 888-332-6419
E-mail: sales@bvahydraulics.com

SFA Companies
10939 N. Pomona Ave. Kansas City, MO 64153
Tel: 888-332-6419
E-mail: sales@bvahydraulics.com

SFA Companies
10939 N. Pomona Ave. Kansas City, MO 64153
Tel: 888-332-6419
E-mail: sales@bvahydraulics.com