# Air Hydraulic Pumps Instruction Manual

**MODELS: PA600, PA600H, PA1500, PA1500A, PA1500B, PA2000 & PA3801**

SFA Companies 10939 N. Pomona Ave. Kansas City, MO 64153
Tel: 888-332-6419 * Fax: 816-448-2142
E-mail: sales@bvahydraulics.com Website: www.bvahydraulics.com

## Maximum Operating Pressure 10,000 PSI

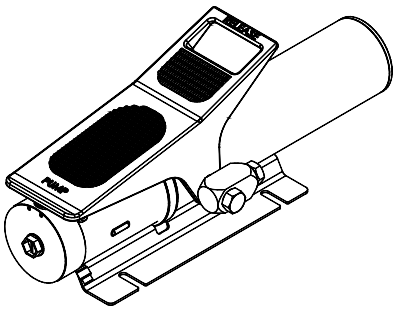


PA600

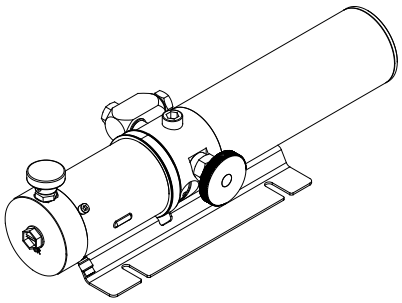

PA600H

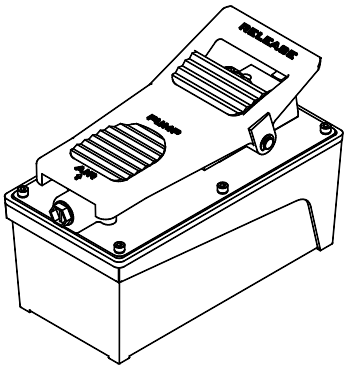


PA1500, PA1500A
& PA1500B

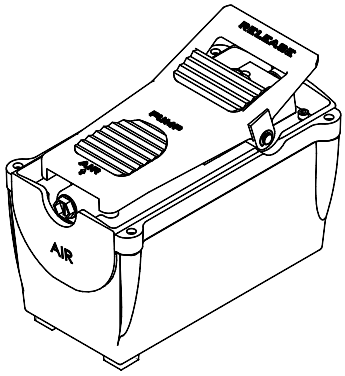


PA2000

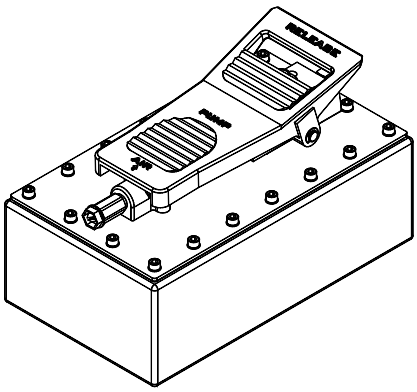


PA3801

*This is the safety alert symbol. It is used to alert you to potential personal injury hazards. Obey all safety messages that follow this symbol to avoid possible injury or death.*

Printed in Taiwan

## SAFETY AND GENERAL INFORMATION

**Save these instructions.** For your safety, read and understand the information contained within. The owner and operator shall have an understanding of this product and safe operating procedures before attempting to use this product. Instructions and safety information shall be conveyed in the operator's native language before use of this product is authorized. Make certain that the operator thoroughly understands the inherent dangers associated with the use and misuse of the product. If any doubt exists as to the safe and proper use of this product as outlined in this factory authorized manual, remove from service immediately.

**Inspect before each use.** It is recommended that, prior to each use, an inspection be done by qualified personnel and that any missing or damaged parts, decals, warning/ safety labels or signs be replaced with BVA Hydraulics authorized replacement parts only. Any pump that appears to be damaged in any way, is worn, leaking or operates abnormally shall be removed from service immediately until such time as repairs can be made. Any pump that has been or suspected to have been subject to a shock load (a load dropped suddenly, causing the system pressure to exceed 10,000 PSI), shall be removed from service immediately until checked out by a BVA Hydraulics authorized service center. Owners and operators of this equipment shall be aware that the use and subsequent repair of this equipment may require special training and knowledge.

## PRODUCT DESCRIPTION

BVA Hydraulics Air Hydraulic Pumps are engineered to meet most Industrial Standards for Performance and Safety. Its unique hydraulic circuit allows quick displacement of hydraulic fluid under no load conditions and easy pumping in loaded conditions. These air actuated pumps supply compressed hydraulic fluid to compatible applications i.e. rams, presses, spreaders, compactors and crimping machines, anywhere that 10,000 PSI of fluid pressure is needed. Special skill, knowledge and training may be required for a specific task and the product may not be suitable for all the jobs described above. Unsuitable applications would include applications that call for a device to move, level or support persons, animals, hazardous materials, mobile homes/ dwellings in general, mirrors and/or plate glass, and/or to connect/secure hatches, components, etc. between bulkheads. The user must ultimately make the decision regarding suitability of the product for any given task and assume the responsibility of safety for himself or herself and others in the work area.

**WARNING:** *To reduce the risk of personal injury and/ or property damage, ensure that the rated working pressure of each pressurized attachment be equal to or greater than the rated working pressure developed by the hydraulic pump.*

**WARNING:** *Always check connections before using. Alteration of these products is strictly prohibited. Use only those adapters and attachments provided and approved by the manufacturer.*

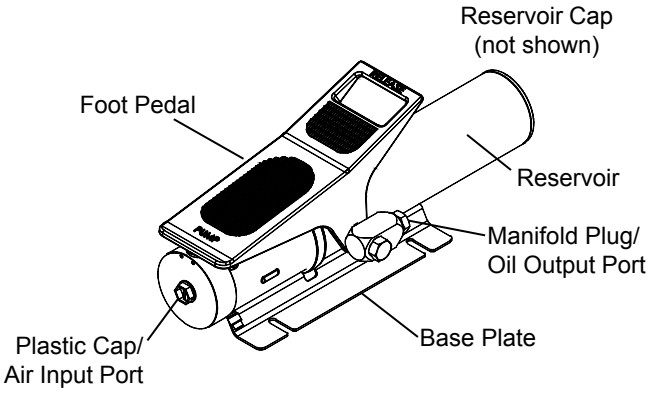


Figure 1 - Model PA600 Components

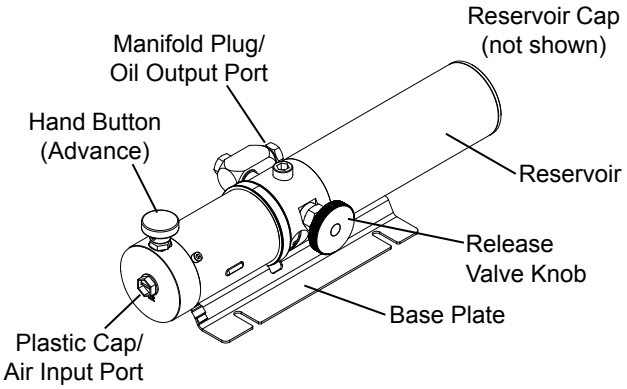


Figure 2 - Model PA600H Components

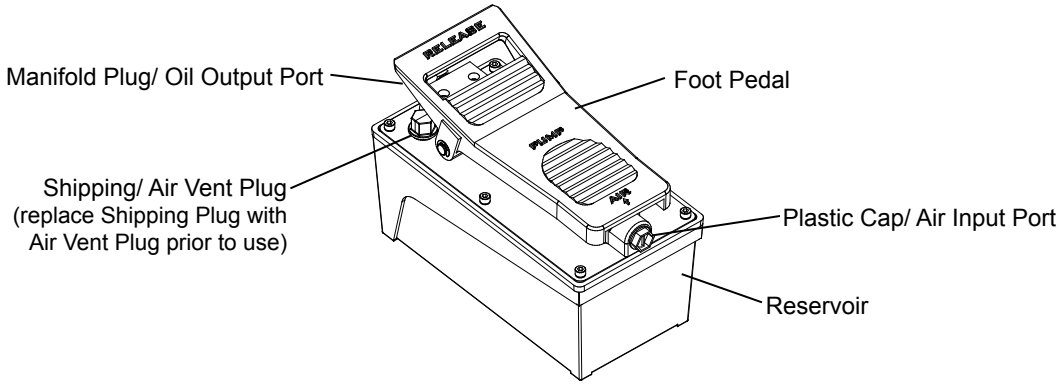


Figure 3 - Models PA1500, PA1500B, PA2000 & PA3801 Components (PA1500 shown)

# ⚠ WARNING

- Study, understand, and follow all instructions provided with and on this device before use.
- No alteration shall be made to this device.
- Always wear protective gear when operating hydraulic equipment.
- Keep hydraulic equipment away from flames and heat. Hydraulic fluid can ignite and burn. Do not operate if leaks are detected.
- Crush Hazard. Keep hands and feet away from loading area. Avoid pinch points or crush points that can be created by the load, cylinder, or any equipment of system.
- To avoid crushing and related injuries: NEVER work on, under or around a lifted load before it is properly supported by appropriate means. Never rely on hydraulic pressure alone to support load.

**HYDRAULIC PUMPS**

- The user must be a qualified operator familiar with the correct operation, maintenance, and use of pumps. Lack of knowledge in any of these areas can lead to personal injury.
- Do not exceed rated capacity of the pump or any equipment in the system.
- Never attempt to lift a load weighing more than the capacity of the cylinder.
- Burst hazard exists if hose or connection pressure exceeds rated pressure.
- Inspect pump, cylinder, hoses and connections before each use to prevent unsafe conditions from developing. Do not use if damaged, altered or in poor condition. Do not operate system with bent or damaged coupler or damaged threads.
- Never hold or stand directly in line with any hydraulic connections while pressurizing.
- Use gauge or other load measuring instrument to verify load.
- Never attempt to disconnect hydraulic connections under pressure. Release all line pressure before disconnecting hoses.
- Do not subject the pump and its components to shock loads.
- Use only approved accessories and approved hydraulic fluid.
- Never attach ANY component not authorized by manufacturer.
- Always ensure that the chosen application is stable to work on and around.
- Do not connect to application which can return more oil to the reservoir than the pump reservoir can hold.
- Do not connect pump to hydraulic system powered by another pump.
- This device is not suitable for use as support device! As the system load is lifted, use blocking and cribbing to guard against a falling load.
- Clear all personnel before lowering load or depressurizing the system.
- Do not disassemble hydraulic cylinder, refer repairs to qualified, authorized personnel.

**HYDRAULIC HOSES & FLUID TRANSMISSION LINES**

- Avoid short runs of straight line tubing. Straight line runs do not provide for expansion and contraction due to pressure and/or temperature changes.
- Reduce stress in tube lines. Long tubing runs should be supported by brackets or clips. Before operating the pump, tighten all hose connections with proper tools. Do not overtighten. Connections should only be tightened securely and leak-free. Overtightening can cause premature thread failure or high pressure fittings to burst.
- Should a hydraulic hose ever rupture, burst or need to be disconnected, immediately shut off the pump and release all pressure. Never attempt to grasp a leaking pressurized hose with your hands. The force of escaping hydraulic fluid can inflict injury.
- Do not subject the hose to potential hazard such as fire, sharp objects, extreme heat or cold, or heavy impact.
- Do not allow the hose to kink, twist, curl, crush, cut or bend so tightly that the fluid flow within the hose is blocked or reduced. Periodically inspect the hose for wear.
- Do not pull, position or move setup by the hose.
- Hose material and coupler seals must be compatible with hydraulic fluid used. Hoses also must not come in contact with corrosive materials such as battery acid, creosote-impregnated objects and wet paint. Never paint a coupler or hose.
- FAILURE TO HEED THESE WARNINGS MAY RESULT IN PERSONAL INJURY AS WELL AS PROPERTY DAMAGE.

## SPECIFICATIONS

| Model Number | Usable Oil Capacity ($in^3$) | Rated Pressure (psi) | Output Flow Rate ($in^3$/min) | | Input Air Pressure (psi) | Output Port Thread (Oil) | Input Port Threads (Air) | Weight (lbs w/ fluid) |
|---|---|---|---|---|---|---|---|---|
| | | | No Load | Load | | | | |
| PA600 | 36.6 | 10,000 | 61 | 9 | 110 - 175 | 3/8” -18NPTF | 1/4” - 18NPT | 14.1 |
| PA600H | | | | | | | | 12.7 |
| PA1500, PA1500B | 91.5 | | 66 | 11 | | | | 18.1 |
| PA1500A | 91.5 | | 61 | 11 | | | | 18.7 |
| PA2000 | 122 | | 65 | 12 | | | | 20.1 |
| PA3801 | 231.9 | | 65 | 12 | | | | 26.4 |

## BEFORE USE AND SET UP

1. Familiarize yourself with the specifications and illustrations in this owners manual. Know your pump, its limitations and how it operates before attempting to use. Refer to specification chart on page 3 for details of oil port thread size, usable oil capacity, and more. If in doubt, contact BVA Hydraulics Technical Service (888) 332-6419.

2. **For models PA1500, PA1500A, PA1500B, PA2000 & PA3801:** Replace shipping plug (red color) with air vent plug (black color) before use.

3. **Air Connection:** Remove plastic cap, connect suitable air supply to air input port. Air input port is designed to fit the popular 1/4" NPT air nipple (not included). Ensure that your air source can dedicate 7.8CFM @ 110~175 PSI to each pump operated.

4. **Hydraulic Connection:** Clean all areas around the oil port of pump and cylinder. Inspect all threads and fitting for signs of wear or damage and replace as needed. Clean all hose ends, couplers and union ends. Remove the manifold plug, then connect oil output port to suitable fittings and application/cylinder.

**NOTICE**: *Always secure threaded port connections with high grade, non-hardening pipe thread sealant. Teflon tape can be used if only one layer of tape is used and it is applied carefully, two threads back, to prevent the tape from being introduced into hydraulic system, which could cause jamming of precision-fit parts.*

**WARNING:** *To reduce the risk of personal injury and/ or property damage, Hydraulic connections must be securely fastened before building pressure in the system. Release all system pressure before loosening any hydraulic connection in the system.*

## OPERATION

**WARNING:** *Always monitor pressure, load or position using suitable equipment. Pressure may be monitored by means of an optional manifold and gauge. Load may be monitored by means of a load cell and digital indicator. Correct application position can only be determined by the operator of the equipment.*

**For Model PA600H:** (Hand Button Pump)
1. To extend the cylinder:
   a. Close release valve by turning it clockwise firmly.
   b. Depress the hand button on top of the air input port until desired pressure, load or position is reached.
2. To hold the cylinder in position, simply release the hand button to deactivate the pump.
3. To retract cylinder, open release valve by turning it counter-clockwise slowly.

**For Models PA600, PA1500, PA1500B, PA2000 & PA3801:**
1. To extend the cylinder, depress on the foot pedal marked "*Pump*" (horizontal portion) until desired pressure, load or position is reached.
2. To hold the cylinder in position, release the foot pedal to deactivate the pump.
3. To retract the cylinder, depress the release valve by stepping on the foot pedal marked "*Release*" (raised, stirrup shaped portion).

**For Model PA1500A:**
1. Install in-line pressure gauge between air pump and cylinder.
2. Loosen External Pressure Relief Adjustment Screw fully.
3. Begin pumping air while monitoring pressure gauge. Tighten Adjustment Screw (approximately 1/4 turn increments) until gauge reaches desired working pressure.

a. Rotate clockwise to increase

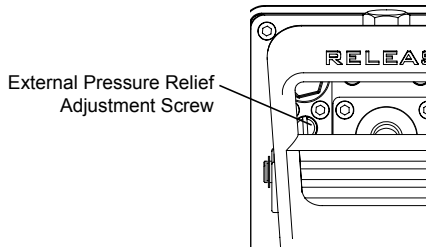


**NOTICE:** *Never operate a pump which is disconnected from application. If operate in this condition, the hose and connections will become pressurized. This increases burst hazard. Damage may occur to pump and its components.*

## MAINTENANCE

**NOTICE:** *Use only good quality hydraulic fluid. Never use brake fluid, transmission fluid, turbine oil, motor oil, alcohol, glycerin etc. Use of other than good quality hydraulic oil will void warranty and damage the pump, hose, and application. Premium quality hydraulic jack fluid is recommended.*

1. Inspect hoses and connections daily. Replace damaged components immediately.
2. Tighten connections as needed. Use non-hardening pipe thread compound when servicing connections.

**Adding Hydraulic Fluid**

1. Depressurize and disconnect hydraulic hose from application/ cylinder.
   a. For Model PA600 & PA600H: With pump in its vertical position, remove the reservoir cap located on the reservoir.
   b. For Model PA1500, AP1500B, PA2000 & PA3801: With pump in its upright, horizontal position, remove the air vent plug located on the top plate of the reservoir.
2. Use a small funnel to fill the oil to within 3/4" (19mm) of the opening.
3. Wipe up any spilled fluid and reinstall the air vent plug/ reservoir cap.

**Changing Hydraulic Fluid**

1. For best results, change fluid once a year or every 300 hours of use.
2. Repeat # 2 above, then pour used fluid into a sealable container.
3. Dispose of fluid in accordance with local regulations.
4. Fill with a good quality hydraulic fluid as recommended above. Reinstall air vent plug/ reservoir cap. **Lubrication**

When pump is operated on daily basis, the manufacturer recommends installing an inline oiler and air dryer. Use SAE grade oil (5W to 30W).

**Storage**

1. When not in use, depressurize and disconnect hydraulic pump from application.
2. Wipe clean, thoroughly and store in clean, dry environment. Avoid temperature extremes.
3. For transportation or long storage, replace the air vent plug with shipping plug (for model PA1500, PA1500B, PA2000 & PA3801).

## TROUBLESHOOTING GUIDE

The following information is intended as an aid in determining if problem exists. Pumps should be repaired only by authorized BVA Service Center. For repair service, contact service center in your area.

| Symptom | Possible Causes | Corrective Action |
|---|---|---|
| Application does not extend, move or respond to pressurized fluid | • Overload condition<br>• Loose couplers<br>• Faulty couplers<br>• Pump malfunction<br>• Inadequate air supply | • Remedy overload condition<br>• Tighten couplers<br>• Replace couplers<br>• Contact service center<br>• Ensure air source can dedicate 7.8 CFM @ 110~175 PSI |
| Application responds to pressurized fluid, but system does not maintain pressure | • Overload condition<br>• Pump or valve malfunction<br>• Application/connection leaking | • Remedy overload condition<br>• Contact Service Center<br>• Replace application/connection |
| Application responds slower than normal | • Loose connection or coupler<br>• Restricted hydraulic line or fitting<br>• Application/connection leaking | • Tighten connection or coupler<br>• Clean and replace if damaged<br>• Replace application/connection |
| Application does not return fluid to pump (i.e. cylinder will not retract) | • Malfunctioning coupler, damaged application | • Secure load by other means. Depressurize pump and hose, remove coupler and/or application, then renew or replace |
| Application does not fully extend (cylinder or spreader) | • Reservoir overfilled<br>• Fluid level in pump is low | • Secure load by other means. Depressurize pump and hose, remove application, then drain fluid to proper level<br>• Secure load by other means. Depressurize pump and hose, remove application, then fill fluid to proper level |
| Poor performance | • Fluid level in pump is low | • Ensure proper fluid level |

# Air Hydraulic Pump Service Parts

**MODEL: PA600**

SFA Companies 10939 N. Pomona Ave. Kansas City, MO 64153
Tel: 888-332-6419 * Fax: 816-448-2142
E-mail: sales@bvahydraulics.com Website: www.bvahydraulics.com

**Note:** Not all components of the pump are replacement items, but are illustrated as a convenient reference of location and position in the assembly sequence.

## Parts Illustration

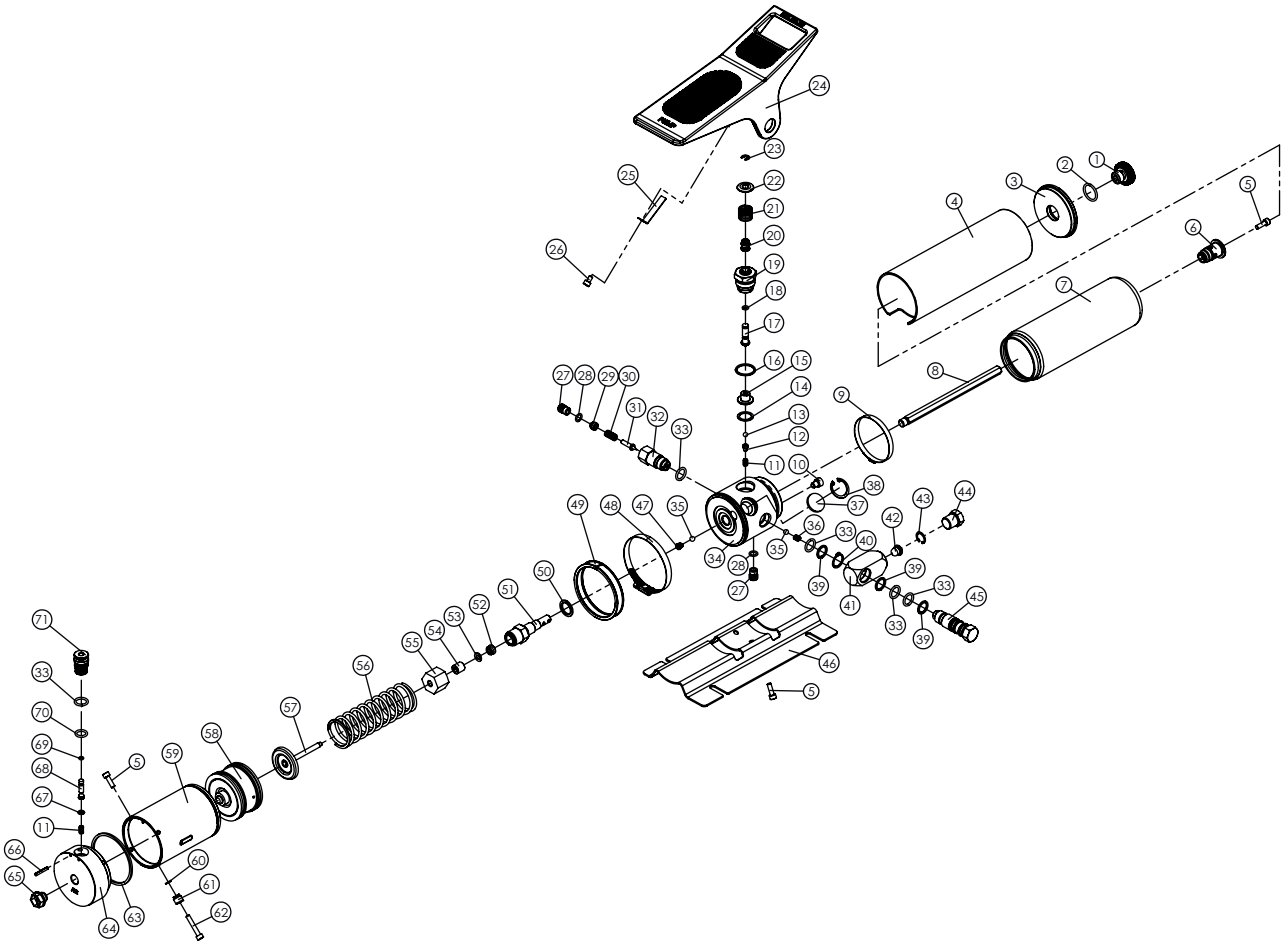

# Air Hydraulic Pump Service Parts

## MODEL: PA600

SFA Companies 10939 N. Pomona Ave. Kansas City, MO 64153
Tel: 888-332-6419 * Fax: 816-448-2142
E-mail: sales@bvahydraulics.com Website: www.bvahydraulics.com

**Note:** Not all components of the pump are replacement items, but are illustrated as a convenient reference of location and position in the assembly sequence.

## Parts List

| Item | PA600H Part# | Description | Qty |
|---|---|---|---|
| 1 | A18-6-5011-101 | Reservoir cover | 1 |
| 2 | * | O-ring | 1 |
| 3 | A18-6-5012-204 | Cover | 1 |
| 4 | A18-6-5003-102 | Cylinder | 1 |
| 5 | 649-1-0050-055 | Screw | 5 |
| 6 | A18-6-5008-203 | Cover adapter | 1 |
| 7 | * | Reservoir | 1 |
| 8 | A18-6-5004-205 | Steel bar | 1 |
| 9 | * | Bundle | 1 |
| 10 | 522-8-0113-107 | Filter | 1 |
| 11 | 512-2-0060-034 | Compressing spring | 2 |
| 12 | 503-9-0075-102 | Steel ball block | 1 |
| 13 | 601-7-0007-007 | Steel ball block | 1 |
| 14 | * | Copper washer | 1 |
| 15 | A18-6-5006-209 | Release valve | 1 |
| 16 | * | O-ring | 1 |
| 17 | A18-6-5005-106 | Release bar | 1 |
| 18 | * | O-ring | 1 |
| 19 | A18-6-5007-201 | Release valve seat | 1 |
| 20 | A18-6-5034-103 | Dust cap | 1 |
| 21 | 511-2-0181-103 | Compressing spring | 1 |
| 22 | A18-6-5023-108 | Spring cover | 1 |
| 23 | 677-5-0050-105 | E-clip | 1 |
| 24 | A18-6-5021-104 | Foot pedal | 1 |
| 25 | A18-6-5033-101 | Wear plate | 1 |
| 26 | 649-1-0050-028 | Screw | 1 |
| 27 | A17-6-2601-100 | Screw | 2 |
| 28 | * | O-ring | 2 |
| 29 | A17-5-1603-300 | Adjust screw | 1 |
| 30 | 512-2-0067-010 | Compressing spring | 1 |
| 31 | A17-6-1216-102 | Nail | 1 |
| 32 | A18-6-5018-105 | High pressure valve seat | 1 |
| 33 | * | O-ring | 5 |
| 34 | A18-6-5010-907 | Base | 1 |
| 35 | 601-7-0008-009 | Steel Ball | 2 |
| 36 | 512-2-0063-104 | Compressing spring | 1 |

| Item | PA600H Part# | Description | Qty |
|---|---|---|---|
| 37 | A17-6-1002-103 | Silencer | 1 |
| 38 | 666-5-0250-108 | C-clip | 1 |
| 39 | * | Back-up ring | 3 |
| 40 | 667-5-0180-009 | C-clip | 1 |
| 41 | A18-6-5002-201 | Adapter | 1 |
| 42 | 520-8-0134-101 | Filter | 1 |
| 43 | 666-5-0150-104 | C-clip | 1 |
| 44 | D05-6-1001-106 | Nut | 1 |
| 45 | A18-6-5001-209 | Oil outlet valve seat | 1 |
| 46 | A18-6-5009-104 | Plank | 1 |
| 47 | 552-2-0008-108 | Compressing spring | 1 |
| 48 | A18-6-5028-108 | Bundle | 1 |
| 49 | A18-6-5014-107 | Cylinder loop | 1 |
| 50 | * | Special Washer | 1 |
| 51 | A18-6-5013-105 | Pump | 1 |
| 52 | * | U-cup | 1 |
| 53 | * | Back-up ring | 1 |
| 54 | A27-6-2023-205 | Bush | 1 |
| 55 | A18-6-5024-100 | Pump cover | 1 |
| 56 | 512-2-0410-017 | Compressing spring | 1 |
| 57 | A18-3-5026-106 | Piston assy. | 1 |
| 58 | A17-4-2100-500 | Air piston assy. | 1 |
| 59 | A18-5-5016-105 | Cylinder | 1 |
| 60 | * | Washer | 4 |
| 61 | A18-6-5030-105 | Screw bush | 2 |
| 62 | 649-1-0050-046 | Screw | 2 |
| 63 | * | Washer | 1 |
| 64 | A18-5-5017-107 | Cylinder cover | 1 |
| 65 | A17-6-1105-103 | Plastic cover | 1 |
| 66 | 601-4-0030-059 | Spring pin | 2 |
| 67 | * | O-ring | 1 |
| 68 | A18-6-5019-107 | Air entrance valve | 1 |
| 69 | * | O-ring | 1 |
| 70 | * | O-ring | 1 |
| 71 | A18-6-5020-102 | Air entrance valve seat | 1 |
| (*) | A18-3-9900-104 | Repair kit | |

(*) indicated items included in, and available only as part of Seal Kit

# Air Hydraulic Pump Service Parts

**MODEL: PA600H**

SFA Companies 10939 N. Pomona Ave. Kansas City, MO 64153
Tel: 888-332-6419 * Fax: 816-448-2142
E-mail: sales@bvahydraulics.com Website: www.bvahydraulics.com

**Note:** Not all components of the pump are replacement items, but are illustrated as a convenient reference of

## Parts Illustration

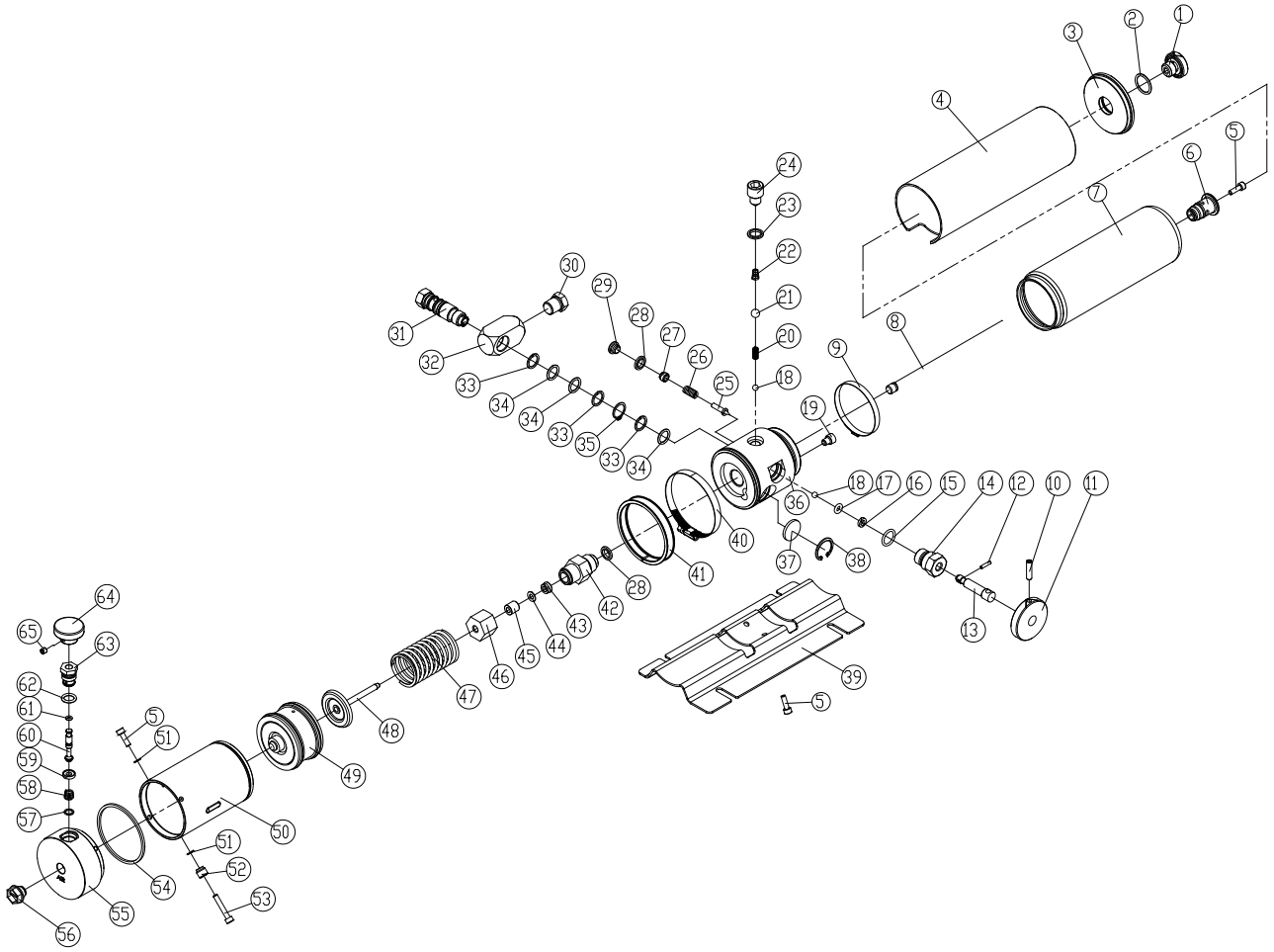

# Air Hydraulic Pump Service Parts

**MODEL: PA600H**

SFA Companies 10939 N. Pomona Ave. Kansas City, MO 64153
Tel: 888-332-6419 * Fax: 816-448-2142
E-mail: sales@bvahydraulics.com Website: www.bvahydraulics.com

**Note:** Not all components of the pump are replacement items, but are illustrated as a convenient reference of location and position in the assembly sequence.

## Parts List

| Item | PA600H Part# | Description | Qty |
|---|---|---|---|
| 1 | A18-6-5011-101 | Reservoir cover | 1 |
| 2 | * | O-ring | 1 |
| 3 | A18-6-5012-204 | Cover | 1 |
| 4 | A18-6-5003-102 | Cylinder | 1 |
| 5 | 649-1-0050-055 | Screw | 5 |
| 6 | A18-6-5008-203 | Cover adapter | 1 |
| 7 | * | Reservoir | 1 |
| 8 | A18-6-5004-205 | Steel bar | 1 |
| 9 | * | Bundle | 1 |
| 10 | 644-1-0060-301 | Screw | 1 |
| 11 | H28-6-1302-105 | Release turntable | 1 |
| 12 | 601-4-0030-040 | Spring pin | 1 |
| 13 | A16-6-5007-106 | Release valve | 1 |
| 14 | A16-6-5008-108 | Release valve seat | 1 |
| 15 | * | O-ring | 1 |
| 16 | * | Back-up ring | 1 |
| 17 | * | O-ring | 1 |
| 18 | 601-7-0008-009 | Steel ball | 2 |
| 19 | 522-8-0113-107 | Filter | 1 |
| 20 | 512-2-0063-104 | Compression spring | 1 |
| 21 | 601-7-0012-000 | Steel ball | 1 |
| 22 | 552-2-0080-106 | Bevel compression spring | 1 |
| 23 | * | Special Washer | 1 |
| 24 | A16-6-5006-104 | Screw | 1 |
| 25 | A17-6-1216-102 | Needle valve | 1 |
| 26 | 512-2-0067-010 | Compression spring | 1 |
| 27 | A17-5-1603-300 | Adjust screw | 1 |
| 28 | * | Special Washer | 2 |
| 29 | 414-6-1215-509 | Screw | 1 |
| 30 | D05-6-1001-106 | Nut | 1 |
| 31 | A18-6-5001-209 | Oil outlet valve seat | 1 |
| 32 | A18-6-5002-100 | Adapter | 1 |
| 33 | * | Back-up ring | 3 |
| 34 | * | O-ring | 3 |
| 35 | 667-5-0180-009 | C-clip | 1 |

| Item | PA600H Part# | Description | Qty |
|---|---|---|---|
| 36 | A16-6-5009-100 | Base | 1 |
| 37 | A17-6-1002-103 | Muffler | 1 |
| 38 | 666-5-0250-108 | C-clip | 1 |
| 39 | A18-6-5009-104 | Plank | 1 |
| 40 | A18-6-5028-108 | Bundle | 1 |
| 41 | A18-6-5014-107 | Cylinder loop | 1 |
| 42 | A59-6-1013-105 | Pump | 1 |
| 43 | * | U-cup | 1 |
| 44 | * | Back-up ring | 1 |
| 45 | A27-6-2023-205 | Bush | 1 |
| 46 | A18-6-5024-100 | Pump cover | 1 |
| 47 | 512-2-0410-017 | Compression spring | 1 |
| 48 | A18-3-5026-106 | Piston assy. | 1 |
| 49 | A17-4-2100-500 | Air piston assy. | 1 |
| 50 | A18-5-5016-105 | Cylinder | 1 |
| 51 | * | Washer | 4 |
| 52 | A18-6-5030-105 | Screw bushing | 2 |
| 53 | 649-1-0050-046 | Screw | 2 |
| 54 | * | Washer | 1 |
| 55 | A16-6-5003-108 | Cylinder cover | 1 |
| 56 | A17-6-1105-103 | Plastic cover | 1 |
| 57 | A16-6-5005-102 | Washer | 1 |
| 58 | 552-2-0108-010 | Bevel compression spring | 1 |
| 59 | * | Washer | 1 |
| 60 | A16-6-5001-104 | Air entrance valve | 1 |
| 61 | * | O-ring | 1 |
| 62 | * | O-ring | 1 |
| 63 | A16-6-5002-106 | Air entrance valve seat | 1 |
| 64 | A16-6-5004-100 | Button | 1 |
| 65 | 644-1-0060-05311 | Screw | 1 |
| (*) | A16-3-9900-100 | Seal kit | - |

(*) indicated items included in, and available only as part of Seal Kit

# Air Hydraulic Pump Service Parts

**MODEL: PA1500, PA1500A & PA1500B**

SFA Companies 10939 N. Pomona Ave. Kansas City, MO 64153
Tel: 888-332-6419 * Fax: 816-448-2142
E-mail: sales@bvahydraulics.com Website: www.bvahydraulics.com

**Note:** Not all components of the pump are replacement items, but are illustrated as a convenient reference of location and position in the assembly sequence.

## Parts Illustration

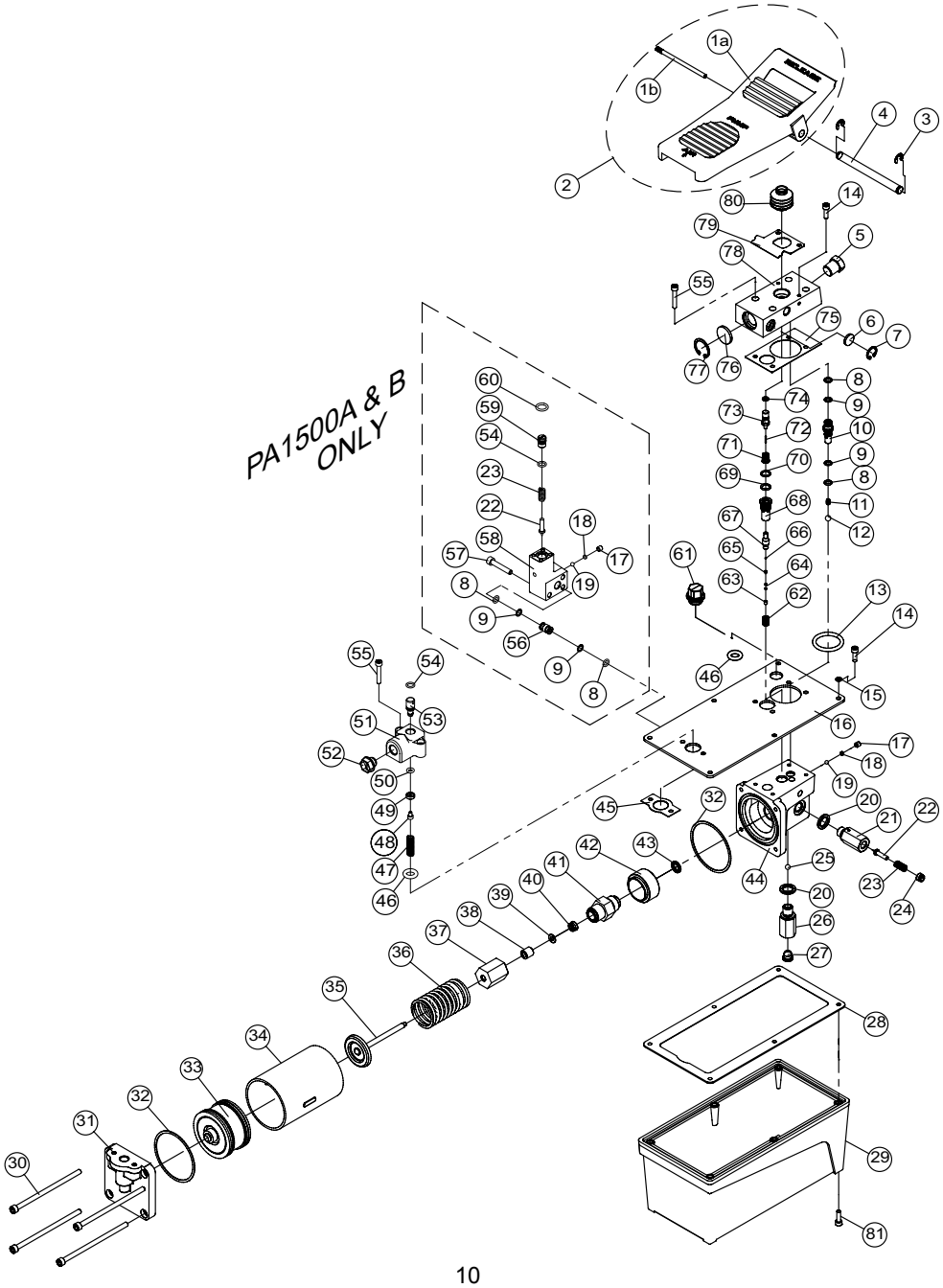

# Air Hydraulic Pump Service Parts

**MODEL: PA1500, PA1500A & PA1500B**

## Parts List

| Item | Part# | Description | Qty |
|---|---|---|---|
| 1a | A57-6-6003-102 | Foot Pedal | 1 |
| 1b | A57-6-6001-108 | Steel Bar | 1 |
| 2 | A57-4-6003-100 | Foot Pedal w/ Steel Bar | - |
| 3 | * ** | Pedal Axle E-clip | 2 |
| 4 | A57-6-2003-102 | Pedal Axle | 1 |
| 5 | D05-6-1001-106 | Manifold Plug (oil output port) | 1 |
| 6 | A57-6-3007-105 | Noise Suppressor | 1 |
| 7 | 666-5-0160-107 | C-clip | 1 |
| 8 | * ** | O-ring | 2/4 |
| 9 | * ** | Back-up Ring | 2/4 |
| 10 | A57-6-4002-201 | Oil Discharge Valve | 1 |
| 11 | 512-2-0043-108 | Compression spring | 1 |
| 12 | 601-7-0009-001 | Steel Ball | 1 |
| 13 | 511-7-0410-102 | O-ring | 1 |
| 14 | 649-1-0050-055 | Allen Screw (M5x0.8x15L) | 8/12 |
| 15 | * ** | Copper Washer | 6/10 |
| 16 | A57-6-1603-202 | Reservoir Cover | 1 |
| | A57-6-6013-105 | Reservoir Cover (PA1500A) | |
| 17 | 644-1-0060-05311 | Set Screw | 1/2 |
| 18 | 503-9-0050-106 | Steel Ball Seat | 1/2 |
| 19 | 601-7-0006-005 | Steel Ball | 1/2 |
| 20 | * | Crush Washer | 2 |
| 21 | A59-6-1017-102 | Pressure Relief Vlv Cylinder | 1 |
| 22 | A17-6-1216-102 | Pressure Relief Vlv Stem | 1/2 |
| 23 | 512-2-0067-010 | Compression Spring | 1/2 |
| 24 | A17-5-1603-300 | Pressure Relief Vlv Screw | 1 |
| 25 | 601-7-0008-009 | Steel Ball | 1 |
| 26 | A59-6-1015-108 | Oil Intake Valve | 1 |
| 27 | 520-8-0134-101 | Filter | 1 |
| 28 | * ** | Gasket | 1 |
| 29 | A57-6-1601-107 | Oil Reservoir | 1 |
| 30 | 649-1-0060-122 | Thru Bolt, Air Motor | 4 |
| 31 | A57-6-1002-105 | End Plate, Air Motor | 1 |
| 32 | A17-6-2105-108** | Gasket | 2 |
| 33 | A17-4-2100-500 | Air Motor Piston | 1 |
| 34 | A57-6-1003-107 | Cylinder, Air Motor Piston | 1 |
| 35 | A57-3-1011-108 | Pump Piston | 1 |
| 36 | 512-2-0410-017 | Compression Spring | 1 |
| 37 | A57-6-1014-102 | Pump Piston Guide | 1 |
| 38 | A57-6-2023-108 | Bushing | 1 |
| 39 | 573-7-0120-105** | Back-up Ring | 1 |

Qty - PA1500, PA1500B/PA1500A
(*) indicated items included in, and available only as part of PA1500/PA1500B Seal Kit
(**) Indicated items included in PA1500A Seal Kit

| Item | Part# | Description | Qty |
|---|---|---|---|
| 40 | * | U-cup | 1 |
| 41 | A59-6-1013-105 | Pump Piston Cylinder | 1 |
| 42 | A57-6-1016-106 | Spacer | 1 |
| 43 | H18-6-8103-104 | Crush Washer | 1 |
| 44 | A57-6-1001-204 | Base, Hyd Unit | 1 |
| | A57-6-6012-103 | Base, Hyd Unit (PA1500A) | |
| 45 | A57-6-1605-105** | Gasket | 1 |
| 46 | 511-7-0140-200 | O-ring | 2 |
| 47 | 512-2-0092-101 | Compression Spring | 1 |
| 48 | 649-1-0040-007 | Allen Screw (M4x0.7x0.6L) | 1 |
| 49 | A57-6-5004-109 | Air Intake Cap | 1 |
| 50 | 511-7-0053-104** | O-ring | 1 |
| 51 | A57-6-5001-103 | Air Manifold | 1 |
| 52 | A17-6-1105-103 | Plastic Cap (air) | 1 |
| 53 | A57-6-5003-107 | Air Intake Valve | 1 |
| 54 | 511-7-0080-309** | O-ring | 1/2 |
| 55 | 649-1-0050-046 | Allen Screw (M5x0.8x30L) | 6 |
| 56 | H53-6-1810-101 | Oil Outlet Tube | 1 |
| 57 | 649-1-0060-609 | Screw | 3 |
| 58 | A57-6-6011-101 | Pressure Adjusting Base | 1 |
| 59 | A17-6-2601-100 | Pressure Adjusting Nut | 1 |
| 60 | 511-7-0120-406** | O-ring | 1 |
| 61a | A57-3-5007-107 | Shipping Plug (red) | 1 |
| 61b | A57-3-1900-109 | Air Vent Plug (black) | 1 |
| 62 | 512-2-0061-100 | Compression Spring | 1 |
| 63 | 644-1-0040-204 | Lower Assy Bolt | 1 |
| 64 | * | Compression Spring | 1 |
| 65 | 503-9-0035-100 | Steel Ball Seat | 1 |
| 66 | 601-7-0003-009 | Steel Ball | 1 |
| 67 | A57-6-3003-305 | Release Valve | 1 |
| 68 | A57-6-3004-307 | Release Valve Guide | 1 |
| 69 | * ** | O-ring | 1 |
| 70 | * ** | Back-up Ring | 1 |
| 71 | 552-2-0010-105 | Compression Spring | 1 |
| 72 | * | Release Valve Pin | 1 |
| 73 | A57-6-3001-112 | Release Valve Cap | 1 |
| 74 | * ** | O-ring | 1 |
| 75 | * ** | Gasket | 1 |
| 76 | A17-6-1002-103 | Noise Suppressor | 1 |
| 77 | 666-5-0250-108 | C-clip | 1 |
| 78 | A57-6-6004-104 | Oil Manifold | 1 |
| 79 | A57-6-5101-107 | Detent Spring | 1 |
| 80 | A57-6-6005-106 | Dust Cap | 1 |
| 81 | 649-1-0063-605 | Bolt (PA1500B) | 4 |
| * | A57-3-9901-101 | Repair Kit | - |
| ** | A57-3-9932-102 | Repair Kit (PA1500A) | - |

# Air Hydraulic Pump Service Parts

**MODEL: PA2000**

SFA Companies 10939 N. Pomona Ave. Kansas City, MO 64153
Tel: 888-332-6419 * Fax: 816-448-2142
E-mail: sales@bvahydraulics.com Website: www.bvahydraulics.com

**Note:** Not all components of the pump are replacement items, but are illustrated as a convenient reference of location and position in the assembly sequence.

## Parts Illustration

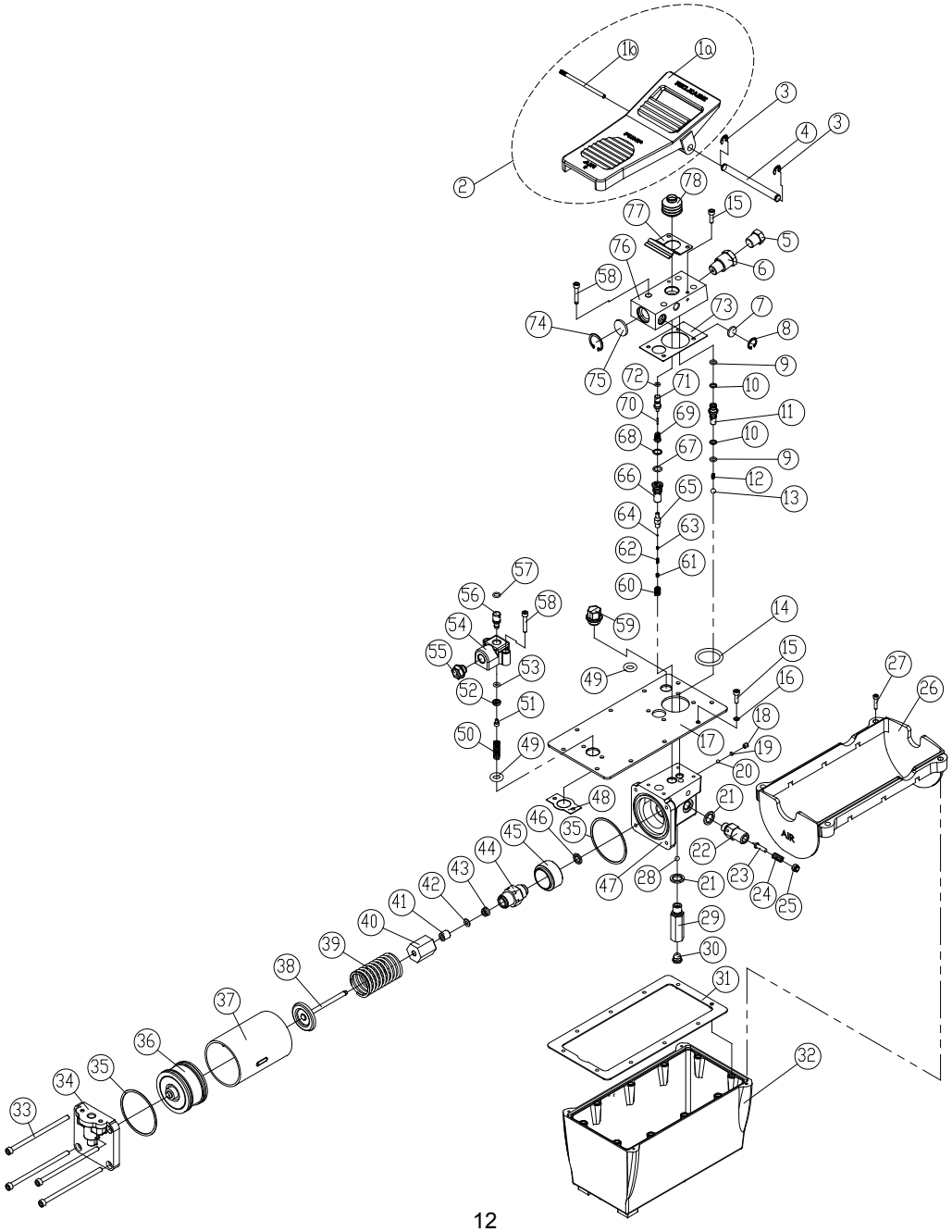

# Air Hydraulic Pump Service Parts

**MODEL: PA2000**

SFA Companies 10939 N. Pomona Ave. Kansas City, MO 64153
Tel: 888-332-6419 * Fax: 816-448-2142
E-mail: sales@bvahydraulics.com Website: www.bvahydraulics.com

**Note:** Not all components of the pump are replacement items, but are illustrated as a convenient reference of location and position in the assembly sequence.

## Parts List

| Item | PA2000 Part# | Description | Qty |
|---|---|---|---|
| 1a | N/A | Foot pedal | 1 |
| 1b | N/A | Steel bar | 1 |
| 2 | A57-4-6003-100 | Foot pedal w/ steel bar | - |
| 3 | * | Pedal axle e-clip | 2 |
| 4 | A57-6-2003-102 | Pedal axle | 1 |
| 5 | D05-6-1001-106 | Manifold plug (oil output port) | 1 |
| 6 | A58-6-6008-109 | Output coupler | 1 |
| 7 | A57-6-3007-105 | Noise suppresor | 1 |
| 8 | 666-5-0160-107 | C-clip | 1 |
| 9 | * | O-ring | 2 |
| 10 | * | Back-up ring | 2 |
| 11 | A57-6-4002-201 | Oil discharge valve | 1 |
| 12 | 512-2-0043-108 | Compression spring | 1 |
| 13 | 601-7-0009-001 | Steel ball | 1 |
| 14 | 511-7-0410-102 | O-ring | 1 |
| 15 | 649-1-0050-055 | Allen screw (M5x0.8x15L) | 12 |
| 16 | * | Copper washer | 10 |
| 17 | A58-5-1603-102 | Top reservoir plate | 1 |
| 18 | 644-1-0060-05311 | Set screw | 1 |
| 19 | 503-9-0050-106 | Steel ball seat | 1 |
| 20 | 601-7-0006-005 | Steel ball | 1 |
| 21 | * | Crush washer | 2 |
| 22 | A58-6-1017-105 | Pressure relief valve cylinder | 1 |
| 23 | A17-6-1216-102 | Pressure relief valve stem | 1 |
| 24 | 512-2-0067-010 | Compression spring | 1 |
| 25 | A17-5-1603-300 | Pressure relief valve screw | 1 |
| 26 | A58-6-2201-103 | Reservoir spacer | 1 |
| 27 | 649-1-0040-108 | Allen screw | 4 |
| 28 | 601-7-0008-009 | Steel ball | 1 |
| 29 | A58-6-1015-101 | Oil intake valve | 1 |
| 30 | 520-8-0134-101 | Filter | 1 |
| 31 | * | Gasket | 1 |
| 32 | A58-5-1602-100 | Reservoir | 1 |
| 33 | 649-1-0060-122 | Allen Screw | 4 |
| 34 | A57-6-1002-105 | Motor cover | 1 |
| 35 | A17-6-2105-108 | Gasket | 2 |
| 36 | A17-4-2100-500 | Air motor piston assy. | 1 |
| 37 | A57-6-1003-107 | Cylinder, air motor piston | 1 |
| 38 | A27-3-2200-102 | Pump piston | 1 |
| 39 | 512-2-0410-017 | Compression spring | 1 |
| 40 | A57-6-1014-102 | Pump piston guide | 1 |

| Item | PA2000 Part# | Description | Qty |
|---|---|---|---|
| 41 | A27-6-2023-205 | Bushing | 1 |
| 42 | 573-7-0120-105 | Back-up ring | 1 |
| 43 | * | U-cup | 1 |
| 44 | A58-6-1013-107 | Pump piston cylinder | 1 |
| 45 | A57-6-1016-106 | Spacer | 1 |
| 46 | H18-6-8103-104 | Crush washer | 1 |
| 47 | A57-6-1001-204 | Base | 1 |
| 48 | A57-6-1605-105 | Gasket | 1 |
| 49 | 511-7-0140-200 | O-ring | 2 |
| 50 | 512-2-0092-101 | Compression spring | 1 |
| 51 | 649-1-0040-007 | Allen screw (M4 x 0.7 x 6L) | 1 |
| 52 | A57-6-5004-109 | Air intake cap | 1 |
| 53 | 511-7-0053-104 | O-ring | 1 |
| 54 | A57-6-5001-103 | Air manifold | 1 |
| 55 | A17-6-1105-103 | Plastic cap (air) | 1 |
| 56 | A57-6-5003-107 | Air intake valve | 1 |
| 57 | 511-7-0080-309 | O-ring | 1 |
| 58 | 649-1-0050-046 | Allen screw (M5x0.8x30L) | 6 |
| 59a | A57-3-5007-107 | Shipping plug (red) | 1 |
| 59b | A57-3-1900-109 | Air vent plug (black) | 1 |
| 60 | 512-2-0061-100 | Compression spring | 1 |
| 61 | 644-1-0040-204 | Lower assy. bolt, release valve | 1 |
| 62 | * | Compression spring | 1 |
| 63 | 503-9-0035-100 | Steel ball seat | 1 |
| 64 | 601-7-0003-009 | Steel ball | 1 |
| 65 | A57-6-3003-305 | Release valve | 1 |
| 66 | A57-6-3004-307 | Release valve seat | 1 |
| 67 | * | O-ring | 1 |
| 68 | * | Back-up ring | 1 |
| 69 | 552-2-0010-105 | Compression spring | 1 |
| 70 | * | Release valve pin | 1 |
| 71 | A57-6-3001-112 | Release valve cap | 1 |
| 72 | * | O-ring | 1 |
| 73 | * | Gasket | 1 |
| 74 | 666-5-0250-108 | C-clip | 1 |
| 75 | A17-6-1002-103 | Noise suppresor | 1 |
| 76 | A57-6-6004-104 | Oil manifold | 1 |
| 77 | A57-6-5101-107 | Detent spring | 1 |
| 78 | A57-6-6005-106 | Dust boot | 1 |
| (*) | A58-3-9903-102 | Seal kit | - |

(*) indicated items included in, and available only as part of Seal Kit

# Air Hydraulic Pump Service Parts

**MODEL: PA3801**

SFA Companies 10939 N. Pomona Ave. Kansas City, MO 64153
Tel: 888-332-6419 * Fax: 816-448-2142
E-mail: sales@bvahydraulics.com Website: www.bvahydraulics.com

**Note:** Not all components of the pump are replacement items, but are illustrated as a convenient reference of location and position in the assembly sequence.

## Parts Illustration

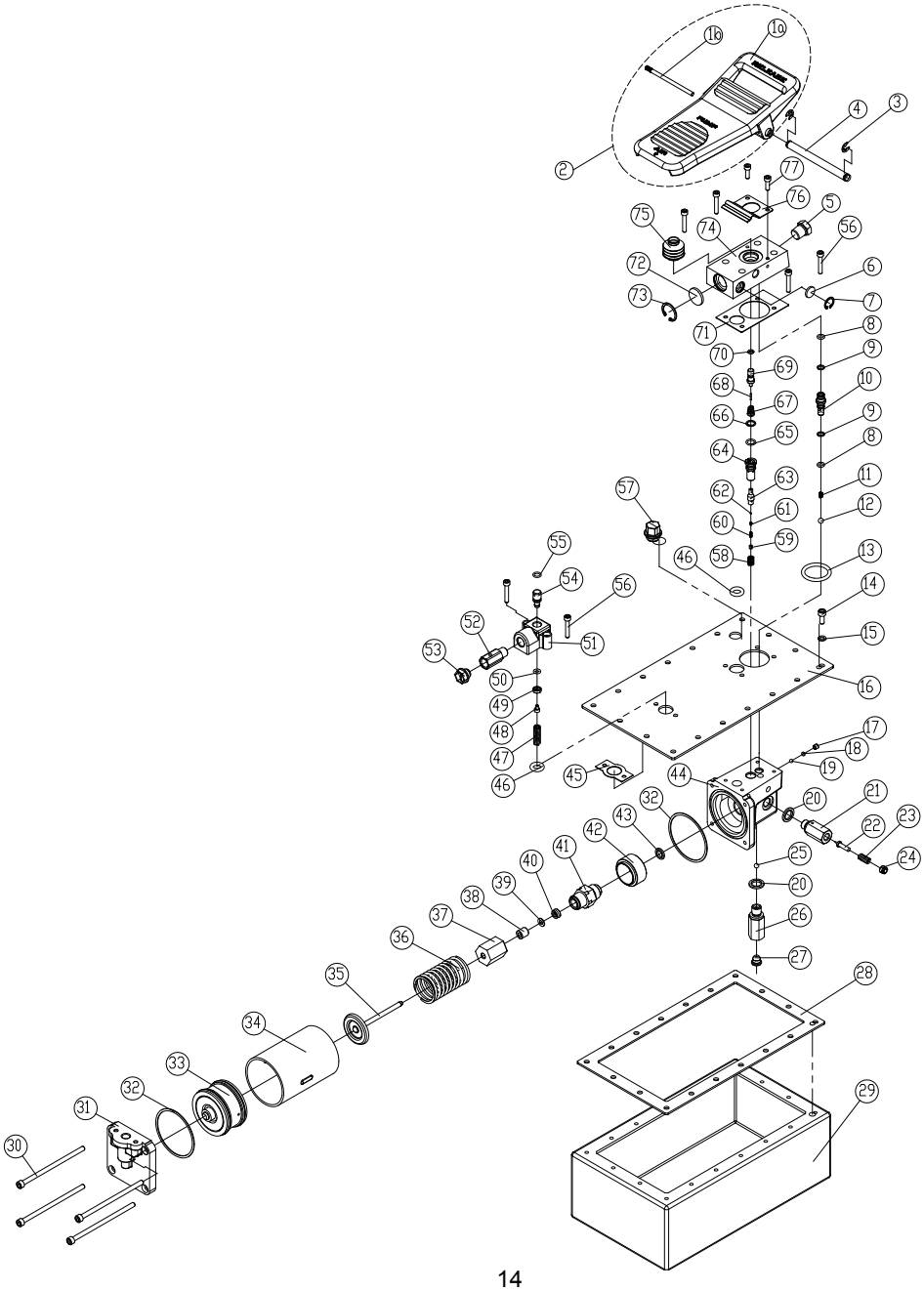

# Air Hydraulic Pump Service Parts

**MODEL: PA3801**

SFA Companies 10939 N. Pomona Ave. Kansas City, MO 64153
Tel: 888-332-6419 * Fax: 816-448-2142
E-mail: sales@bvahydraulics.com Website: www.bvahydraulics.com

**Note:** Not all components of the pump are replacement items, but are illustrated as a convenient reference of location and position in the assembly sequence.

## Parts List

| Item | PA3801 Part# | Description | Qty |
|---|---|---|---|
| 1a | N/A | Foot pedal | 1 |
| 1b | N/A | Steel bar | 1 |
| 2 | A57-4-6003-100 | Foot pedal w/ steel bar | - |
| 3 | * | Pedal axle e-clip | 2 |
| 4 | A57-6-2003-102 | Pedal axle | 1 |
| 5 | D05-6-1001-106 | Manifold plug (oil output port) | 1 |
| 6 | A57-6-3007-105 | Noise suppresor | 1 |
| 7 | 666-5-0160-107 | C-clip | 1 |
| 8 | * | O-ring | 2 |
| 9 | * | Back-up ring | 2 |
| 10 | A57-6-4002-201 | Oil discharge valve | 1 |
| 11 | 512-2-0043-108 | Compression spring | 1 |
| 12 | 601-7-0009-001 | Steel ball | 1 |
| 13 | 511-7-0410-102 | O-ring | 1 |
| 14 | 649-1-0060-040 | Allen screw (M6 x 1 x 15L) | 18 |
| 15 | * | Washer | 18 |
| 16 | A57-6-6008-102 | Reservoir top plate | 1 |
| 17 | 644-1-0060-05311 | Set screw | 1 |
| 18 | 503-9-0050-106 | Steel ball seat | 1 |
| 19 | 601-7-0006-005 | Steel ball | 1 |
| 20 | * | Crush washer | 2 |
| 21 | A59-6-1017-102 | Pressure relief valve cylinder | 1 |
| 22 | A17-6-1216-102 | Pressure relief valve stem | 1 |
| 23 | 512-2-0067-010 | Compression spring | 1 |
| 24 | A17-5-1603-300 | Pressure relief valve screw | 1 |
| 25 | 601-7-0008-009 | Steel ball | 1 |
| 26 | A57-6-6006-108 | Oil intake valve | 1 |
| 27 | 520-8-0134-101 | Filter | 1 |
| 28 | A57-6-6009-104 | Reservoir gasket | 1 |
| 29 | A57-4-6007-108 | Reservoir | 1 |
| 30 | 649-1-0060-122 | Thru bolt, air motor | 4 |
| 31 | A57-6-1002-105 | End plate, air motor | 1 |
| 32 | A17-6-2105-108 | Gasket | 2 |
| 33 | A17-4-2100-500 | Air motor piston | 1 |
| 34 | A57-6-1003-107 | Cylinder, air motor piston | 1 |
| 35 | A27-3-2200-102 | Pump piston | 1 |
| 36 | 512-2-0410-017 | Compression spring | 1 |
| 37 | A57-6-1014-102 | Pump piston guide | 1 |
| 38 | A27-6-2023-205 | Bushing | 1 |
| 39 | 573-7-0120-105 | Back-up ring | 1 |
| 40 | * | U-cup | 1 |

| Item | PA3801 Part# | Description | Qty |
|---|---|---|---|
| 41 | A58-6-1013-107 | Pump piston cylinder | 1 |
| 42 | A57-6-1016-106 | Spacer | 1 |
| 43 | H18-6-8103-104 | Crush washer | 1 |
| 44 | A57-6-1001-204 | Base, hydraulic unit | 1 |
| 45 | A57-6-1605-105 | Gasket | 1 |
| 46 | 511-7-0140-200 | O-ring | 2 |
| 47 | 512-2-0092-101 | Compression spring | 1 |
| 48 | 649-1-0040-007 | Allen screw | 1 |
| 49 | A57-6-5004-109 | Air intake cap | 1 |
| 50 | 511-7-0053-104 | O-ring | 1 |
| 51 | A57-6-5001-103 | Air manifold | 1 |
| 52 | A57-6-2062-108 | Intake coupler | 1 |
| 53 | A17-6-1105-103 | Plastic cap (air) | 1 |
| 54 | A57-6-5003-107 | Air intake valve | 1 |
| 55 | 511-7-0080-309 | O-ring | 1 |
| 56 | 649-1-0050-046 | Allen screw | 6 |
| 57a | A57-3-5007-107 | Shipping plug (red) | 1 |
| 57b | A57-3-1900-109 | Air vent plug (black) | 1 |
| 58 | 512-2-0061-100 | Compression spring | 1 |
| 59 | 644-1-0040-204 | Allen screw | 1 |
| 60 | * | Compression spring | 1 |
| 61 | 503-9-0035-100 | Steel ball seat | 1 |
| 62 | 601-7-0003-009 | Steel ball | 1 |
| 63 | A57-6-3003-305 | Release valve | 1 |
| 64 | A57-6-3004-307 | Release valve guide | 1 |
| 65 | * | O-ring | 1 |
| 66 | * | Back-up ring | 1 |
| 67 | 552-2-0010-105 | Compression spring | 1 |
| 68 | * | Release valve pin | 1 |
| 69 | A57-6-3001-112 | Release valve guide | 1 |
| 70 | * | O-ring | 1 |
| 71 | * | Gasket | 1 |
| 72 | A17-6-1002-103 | Noise suppresor | 1 |
| 73 | 666-5-0250-108 | C-clip | 1 |
| 74 | A57-6-6004-104 | Oil manifold | 1 |
| 75 | A57-6-6005-106 | Dust boot | 1 |
| 76 | A57-6-5101-107 | Detent spring | 1 |
| 77 | 649-1-0050-055 | Allen screw | 2 |
| (*) | A57-3-9911-104 | Seal kit | - |

(*) indicated items included in, and available only as part of Seal Kit

## LIFETIME LIMITED WARRANTY

BVA Hydraulics®, represented in the United States by SFA Companies ["SFA"] warrants this product to be free from defects in material and workmanship for the life of the product as long as the original purchaser owns the product. The warranty is non-transferable and is subject to the terms, exclusions, and limitations described below:

- Damaged components, including but not limited to bent rams, dented or crushed cylinder walls, broken welds or couplers as well as worn out seals, o-rings and springs are the result of misuse and not covered by warranty and BVA Hydraulics will not provide any warranty credit for such damaged components.
- This warranty does not cover ordinary wear and tear, overloading, alterations (including repairs or attempted repairs not performed by BVA Hydraulics or one of its authorized personnel), improper fluid use, or use of the product in any manner for which the product was not intended or the use of which is not in accordance with the instructions or warnings provided with the product.
- In the unlikely event that a BVA Hydraulics product fails due to material defect in workmanship, you may contact SFA for disposition. In such cases, the customer's sole and exclusive remedy for any breach or alleged breach of warranty is limited to the repair or replacement of the defective product.
- Under no circumstances is BVA Hydraulics liable for any consequential or incidental damage or loss whatsoever.
- THIS WARRANTY IS LIMITED TO NEW PRODUCTS SOLD THROUGH AUTHORIZED DISTRIBUTORS AND OTHER CHANNELS DESIGNATED BY BVA HYDRAULICS. NO AGENT, EMPLOYEE OR OTHER REPRESENTATIVE OF BVA HYDRAULICS IS AUTHORIZED TO MODIFY THIS WARRANTY.
- THE FOREGOING IS EXCLUSIVE AND IS IN LIEU OF ALL OTHER EXPRESS AND IMPLIED WARRANTIES, INCLUDING BUT NOT LIMITED TO THE IMPLIED WARRANTIES OF MERCHANTABILITY AND FOR A FITNESS FOR A PARTICULAR PURPOSE.
- Components not manufactured by BVA Hydraulics including certain motor systems, gasoline engines, and others are not covered by this warranty and instead are covered by the manufacturer's separate manufacturer's warranty provided in the package.
- BVA Hydraulics' liability in all cases is limited to, and will not exceed the purchase price paid for the product.

SFA Companies
10939 N. Pomona Ave. Kansas City, MO 64153
Tel: 888-332-6419
E-mail: sales@bvahydraulics.com